X MIND unity

OPERATOR'S MANUAL

ACTEON

Operator's manual • X-Mind unity • VI • (15) • 11/2017 • NUN0EN010I

ENGLISH

Language of the original document: ENGLISH

Important: All new editions and revisions of the manuals supersede the previous ones

Refer to complete manuals and instructions

For complete manuals and instructions www.acteongroup.com

Scan the QR code to access the dedicated website www.acteongroup.com

MANUFACTURER

de Götzen® S.r.l. - a company of ACTEON Group

Via Roma, 45
21057 OLGIATE OLONA (VA) – ITALY
Tel. +39 0331 376760
Fax +39 0331 376763

www.acteongroup.com

For information and technical assistance, contact the manufacturer
imaging.italysupport@acteongroup.com

THE ELECTROMEDICAL EQUIPMENT DESCRIBED IN THIS MANUAL REFERS TO THE **X-MIND unity** MEDICAL DEVICE.

“de Götzen® S.r.l. - ACTEON Group” RESERVES THE RIGHT TO MODIFY THE PRODUCT AND ALL THE MANUALS WITHOUT PRIOR NOTICE.

IT IS PROHIBITED TO MODIFY, COPY, REPRODUCE, DISPLAY, SHARE, DISCLOSE AND PUBLISH THIS MANUAL AND ALL OTHER DOCUMENTS REFERRING TO **X-MIND unity** IN ANY FORM WITHOUT PRIOR WRITTEN CONSENT BY de GÖTZEN® S.R.L. - ACTEON Group

THIS MANUAL MUST ALWAYS BE KEPT NEAR THE MEDICAL DEVICE FOR FUTURE REFERENCE.

“de Götzen® S.r.l. - ACTEON Group” SHALL NOT BE HELD LIABLE FOR MISUSE OF THE INFORMATION PROVIDED BY THIS MANUAL.

1 INTRODUCTION

1.1. PRELIMINARY INFORMATIONS

Before starting with the use of the “X-MIND unity” x-ray system, it is mandatory to carefully read and follow the instructions contained herein in order to obtain the best performance and assure the safety of the patient, operator, device and the environment.

Always pay close attention to the messages when operating the system.

CAUTION
WARNING
PLEASE NOTE
PROHIBITION

LEGEND

⚠ **CAUTION**

The word CAUTION identifies those occurrences which might compromise the operator’s personal safety or cause injuries to people.

WARNING

The word WARNING identifies those occurrences which might compromise the x-ray system’s performance.

PLEASE NOTE

PLEASE NOTE serves to give special indications to facilitate maintenance or make important information clearer.

PROHIBITION

PROHIBITION The word prohibition identifies those actions that must be avoided because they might compromise the operator’s personal safety or cause injuries to people.

CONTENTS

INTRODUCTION **5**
1.1. PRELIMINARY INFORMATIONS 5
1.2. INFORMATION FOR THE OPERATOR 8
1.2.1. QUALITY DETERMINANTS IN X-RAY INTRAORAL RADIOGRAPHY 9
1.3. WARRANTY CONDITIONS 9
1.4. TRANSPORT CONDITIONS 10
1.5. SAFETY WARNINGS 11
X-RAY SYSTEM OVERVIEW **16**
2.1. SYSTEM COMPONENTS 17
2.2. IDENTIFICATION TAGS 19
CONTROL PANEL OVERVIEW **23**
3.1.STATUS LED 24
3.2.INFORMATION DISPLAY 24
3.3.SETTINGS 25
3.4.TYPE OF PATIENT 25
3.5.TYPE OF EXAMS 25
OPERATING INSTRUCTIONS **26**
CONFIGURATION AND TAKING AN X-RAY EXPOSURE **28**
5.1.CHECK THE SELECTED TYPE OF CONE 30
5.2.CHECK THE SOURCE TO SKIN DISTANCE 30
5.3. CHECK THE SELECTED X-RAY TUBE VOLTAGE 31
5.4.CHECK THE SELECTED X-RAY TUBE CURRENT 31
5.5.CHECK THE SELECTED TYPE OF PATIENT 31
5.6.CHECK THE SELECTED X-RAY DETECTOR SUPPORT (FILM/DIGITAL/PSP) 32
5.7.CHECK THE SELECTED EXAM TYPE 32
5.7.1. PERIAPICAL EXAM 32
5.7.2. OCCLUSAL EXAM 32
5.7.3. BITEWING EXAM 33
5.8.CHECK THE SELECTED IRRADIATION TIME 33
5.9.CHECK THE DOSE AREA PRODUCT VALUES 33
5.10. ENABLE ACE MODE (OPTIONAL SOPIX/SOPIX2 INSIDE INSTALLED) 34
5.10.1. IMPORTANT NOTES ABOUT ACE TECHNOLOGY AND X-MIND UNITY 34
5.10.2. HOW TO USE THE X-MIND UNITY WITH SOPIX/SOPIX2 INSIDE & ACE TECHNOLOGY 35
5.11. POSITIONING THE PATIENT 40
5.12. POSITIONING FILM OR SENSOR 40
5.12.1. PARALLELING TECHNIQUE 41
5.12.2. BISECTING ANGLE TECHNIQUE 41
5.13. POSITIONING THE X-RAY GENERATOR AND COLLIMATOR (BEAM LIMITING DEVICE) 42
5.13.1. SUGGESTED INCLINATION ANGLES 43
5.14. MAKE THE EXPOSURE 43
5.15. TRANSPORT AND POSITIONING OF THE MOBILE STAND 46
CHARTS OF DEFAULT EXPOSURE VALUES **48**
6.1.SHORT CONE: 8 INCHES – 20 CM SDD 49
6.2.LONG CONE: 12 INCHES – 30 CM SDD 50
CUSTOMIZE DEFAULT EXPOSUR VALUES **52**
7.1. RESTORING FACTORY VALUES 53
X-RAY CALIBRATION PROCEDURE **54**
ERROR MESSAGES **55**
SUGGESTED MAINTENANCE AND REPAIR **58**
10.1. MAINTENANCE AND CLEANING 58
10.2. DISPOSAL 59
SSD - SOURCE TO SKIN DISTANCE AND FOCAL SPOT POSITION **60**

ANNEX A: TECHNICAL DATA 61
A.1 TECHNICAL SPECIFICATIONS 61
A.2 INTENDED ENVIRONMENT 65
A.3 DIMENSIONS OF THE UNIT 66
A.4 LIST OF INTERNATIONAL STANDARDS AND DIRECTIVES 71
A.5 DOSIMETRIC INDICATIONS 72
A.6 EMC COMPATIBILITY 76

1.2. INFORMATION FOR THE OPERATOR

Dear customer,
thank you for choosing the **X-MIND unity** x-ray system. This medical device has been designed and manufactured by **de Götzen® S.r.l. - ACTEON Group** and is the result of many years of experience in the radiology and medical imaging industry and of advanced electronic applications. This device is a further step forward in dental radiology.
The X-MIND unity is an X-ray generator for dental intra-oral x-ray imaging, particularly, the X-MIND unity is an extra-oral source of X-rays, intended to be used for producing diagnostic dental radiographs for treatment of disease of the teeth, jaw and oral structures. From a clinical application point of view, the X-MIND unity can be applied in routine, dental radiography examinations involving the diagnosis, treatment, i.e. surgical or interventional, of diseases of the teeth, jaws and oral cavity structures.
Its intended medical indication are:

- generic dentistry;
- dental implantology;
- dental surgery.

The intended population can be whatever, anyway the sustainability to X-ray exposure must be evaluated by surgeons, dentists and qualified and authorized physicians (refer also to section “SAFETY WARNINGS”)
The Intended user profile is an able-bodied specialized surgeon, dentist and authorized personnel, who meet the requirements provided by the national laws in force in the country of installation; they must understand the language of the country where the device is installed. The intended conditions of use are detailed in Annex A (“Intended Environment”)
This manual has been written and published under the supervision of de Götzen® S.r.l. - ACTEON Group.
It contains all the latest descriptions and features of the product. Although every effort is made to produce up-to-date and multi-language documentation (since each accompanying document is translated in different languages), this publication should not be regarded as an infallible guide to current specifications. The information in this manual is periodically updated; any amendment will be included in subsequent publications without prior notice by de Götzen® S.r.l. - ACTEON Group.
Contact your dealer to request the latest version of the manual.
In the event of errors, please inform de Götzen® S.r.l. - ACTEON Group promptly.

⚠ CAUTION - ⚠ WARNING

This manual does not include all the recommendations and obligations concerning possession and use of ioniszng radiation sources, since they differ from country to country. Therefore, only the most common are listed
Operators must refer to the laws in force in their country to meet all legal requirements.

⚠ CAUTION - ⚠ WARNING

For the U.S. market: federal laws restrict these devices to sale by or on the order of a specialized surgeons, dentists and authorized personnel, who meet the requirements provided by the national laws in force in the country of installation.

⚠ CAUTION - ⚠ WARNING

This manual describes how to set and use the X-MIND unity x-ray system.
The operator must read and understand the manual before using the medical device.
This manual must be always kept as a reference document.
Before using this device for the first time, it is essential to thoroughly and carefully read the instructions, CAUTION and WARNING messages listed in the paragraph General warnings and precautions.
It is mandatory to comply with these instructions every time the device is used.
X-MIND unity is compatible with all kind of X-ray detectors which have been designed and certified for dental intra-oral radiology; in detail, such a compatibility is ensured by the compliance of the X-MIND unity with the basic safety and essential performance requirements of the IEC 60601-2-65:2012.
The ACE feature is available only when X-MIND unity is used with Sopix/Sopix2 Inside sensor system. For details refer to section 5.10 ENABLE ACE MODE (Optional Sopix/Sopix2 Inside Installed).
In case you’re using the X-MIND unity coupled with the Sopix/Sopix2 Inside x-ray digital sensor manufactured by SOPRO - Acteon Group, the operator is obliged to carefully follow the instructions of both equipments and their relevant accompanying documents, while observing all the safety measures to ensure the safe and correct functioning of both

1.2.1. QUALITY DETERMINANTS IN X-RAY INTRAORAL RADIOGRAPHY

Image quality is linked to the precise and accurate acquisition of information from the x-ray beam transmitted through the patient (ito the x-ray detector). Most problems in dental radiography are not the result of x-ray equipment failure: the production of consistent and high quality x-ray diagnostic images, concurrent with minimal patient exposure, depends generally on different components: quality performance of equipment, characteristics of the modules used which affect the imaging system resolution (i.e.: x-ray image detector type and relevant image processing chain, analogue or digital) and optimal performance of the operator.

Among the physical factors for achieving optimum image quality, the following can be considered:

- optimum optical density and Wiener spectrum,
- detectors for radiography must meet the needs of the specific radiological procedure where they will be used and key parameters are spatial resolution, uniformity of response, contrast sensitivity, dynamic range, acquisition speed and frame rate
- minimization of motion blurring (using short exposure times),
- minimization of geometric blurring (reducing the focal spot size and/or of the object-film distance),
- geometric distortions,
- correct positioning: errors in patient positioning when using uncoupled positioning devices during the various typologies of x-ray examinations may lead to exposure errors, which require additional x-ray exposures, thereby increasing the radiation dose adsorbed by the patient.

This means that it is absolutely essential and mandatory that the operator consider the performances not only of the X-MIND unity equipment itself, but the whole chain of components that bring to the final x-ray diagnostic image.
The essential parameters and relevant metrics which describe the performance of dental X-ray system, with regard to imaging properties and patient dose, methods of testing and whether measured quantities related to those parameters complying with the specified tolerances, are stated by the respective manufacturers and by the requirements specified by the respective applicable standards.
Radiographic films, film processing, digital x-ray image detectors, and imaging plates are vital parts in the imaging chain. It is responsibility of the operator to ensure that these components perform in an acceptable way, with respect to sensitivity, contrast and absence of artifacts. A test of the performance of these components shall precede any acceptance test measurement involving the irradiation of the x-ray detectors using the X-MIND unity[1].

⚠ WARNING

It is full responsibility of the operator and RESPONSIBLE ORGANIZATIONS of the X-MIND unity to check that any kind of x-ray detectors used with the X-MIND unity are in compliance with the requirements stated by their specific regulations in force and to the specifications stated by their respective manufacturers.

1.3. WARRANTY CONDITIONS

Inappropriate use or any arbitrary tampering with this equipment exempts, “de Götzen® S.r.l. - ACTEON Group”, as manufacturer of the “X-MIND unity” x-ray system, from any service under warranty or from any other liability

This warranty is valid only if the following precautions are taken. Please refer to the following warranty conditions:

- **Any repair, modification, adjustment, or any kind of technical intervention must be performed only by de Götzen S.r.l. or by a qualified authorized representative**
- The installation must be made by professionally qualified technicians according to the regulations in force.
- The system must be installed and used in compliance with the instructions given in this operator’s manual and in its associated documentation.
- The device shall be used in compliance with the purposes and applications for which it is designed.

1 For example refer to IEC 61223-3-4 and similar standards.

- The power supply must be adequate to supply the required power indicated in the data contained in the labels of the device.
- **In order to activate your warranty protection carefully read, fill and sign the Warranty Document provided by the seller, immediately after the installation is completed, together with the installer.**
- The system must be checked completely at least each 12 months by professionally qualified technicians according to the regulations in force. Use the manuals provided with the device X-MIND unity for reference.
- In case of repair, please only use OEM spare partsfrom the manufacturer of the **X-MIND unity** Otherwise basic safety and essential performances of the device will be not guaranteed.

de Götzen S.r.l. is not responsible for any damages caused by any person or thing as a consequence of non compliance of any or all guidelines contained in all the manuals provided with the X-MIND unity device.

⚠ **CAUTION**

Non compliance of any of the above mentioned rules and all the indications provided by the manufacturer in the documentation, or successively in written paper or electronic format, will result in voiding the warranty of the product and the manufacturer will be discharged from any obligation, including consequential damages, direct or indirect that may derive to people, things or environment. Furthermore, the facility representative, customer or employees of the facility, will be liable for any damage and/or incident and/or degeneration of the health status of a patient, operator, involved people and the surrounding environment.

This will also result in service charges for non-warranty technical assistance.

1.4. TRANSPORT CONDITIONS

The "X-MIND unity" x-ray system travels at the receiver's own risk.

All claims for damages or mishaps regarding the shipment must be pointed out in the presence of the shipping agent.
In case of actual or suspected damages, the receiver shall indicate the proper reserves on the way-bill or on the consignment note.

1.5. SAFETY WARNINGS

A few safety recommendations are listed here below which must be followed when using the "**X-MIND unity** x-ray system".

⚠ **CAUTION**

GENERAL REQUIREMENTS

- *RESPONSIBLE ORGANIZATION is the authority that has the responsibility for the USE and MAINTENANCE of the X-MIND unity system. The training and preparation of personnel is the responsability of THE RESPONSIBLE ORGANIZATION.*
- *X-MIND unity is an x-ray generator and must be used and handled only by specialised surgeons, dentists and authorized personnel, who meet the requirements provided by the national laws in force in the country of installation.*
- *It is mandatory for the RESPONSIBLE ORGANIZATION to provide a routine and special maintenance schedule for biomedical equipment; this schedule must be documented for every device and transmitted to the various operating levels (*).The preventive maintenance (that must be performed at least every twelve months), which includes functional, performance and safety tests of the device, must be carried out by qualified, authorized professional technicians.It is mandatory to ensure patients' health and safety and proper X-MIND unity operation (IEC 60601-1 etc.).These operations must be carried out according to the methods and frequency indicated in this manual, the installation and maintenance manual and maintenance manual. Failure to comply with this requirement or with the messages concerning anomalies will release the manufacturer from any liability for direct and indirect injuries to persons and/or damage to property or the environment. Furthermore, the managers of the facility, customers or collaborators shall be held liable for any damage and/or accidents and/or degeneration of patients' or operators' health or of the surrounding environment. The RESPONSIBLE ORGANIZATION must also provide for the safe and proper use of the equipment. (*) For Italy refer to Presidential Decree 14/01/1997, Legislative Decree No. 81/2008 (as subsequently amended and modified).*
- *Operators must know the environmental and operating specifications of the device, as well as the procedures to follow in the event of hazards or emergency stops.*
- *The X-MIND unity has been designed to acquire radiography images for dental intraoral x-ray imaging. The X-MIND unity medical device must not be used for x-ray imaging of other body parts.*
- *Carefully follow the instructions in this manual to install, operate and maintain the X-MIND unity device. In the event that local laws and standards are more restrictive than the manufacturer's indications, the former supersede the latter.*
- *The RESPONSIBLE ORGANIZATION must comply with the standards and regulations in force concerning the installation of the medical device in consideration of the place of installation.*
- *The operator is cautioned to monitor the patient and the parameters of the X-Mind unity throughout the entire duration of the x-ray examination.*
- *It is prohibited to modify any part of the X-Mind unity medical device.*
- *de Götzen S.r.l. - ACTEON Group and its authorized technicians are not required to verify compliance of the installation site with local standards concerning electrical safety and X-ray protection and with any other directive concerning safety in force in the country of installation.*
- *The RESPONSIBLE ORGANIZATIONS of the facility must ensure compliance of the installation site with the local laws in force.*
- *The Installation of the* **X-MIND unity** *system and all its accessories must be executed only by trained, qualified and authorized service personnel.*

- *Before each examination, it is mandatory to apply a disposable protection sheath to the collimator cone (Beam Limiting Device) which is designed to cover the end part of the X-ray unit, which is more susceptible of being directly contaminated during the X-ray exposure (class I Medical Device Directive 93/42/EEC and subsequent amendments). It can come into contact with the patient's skin: verify bio-compatibility according to the principles given in the ISO 10993 series of standards, refer for details to the disposable use protection's instructions for use.*

- *Before operating the X-MIND unity you must assure that the device has no visible signs of damage.*

- *The X-MIND unity has been certified by Accredited Laboratories, according to the requirements stated by the applicable standards, to operate alone or optionally in conjunction with (by means of specific internal connections and configurations) ONLY with the integrated use of the Sopix/Sopix2 Inside x-ray digital intraoral sensor. It is strictly forbidden to connect or forcing to connect to the X-MIND unity, under any circumstance, any other device than the Sopix/Sopix2 Inside sensor type manufactured by Sopro - Acteon Group Disregarding this warning can put the safety and performances of the X-MIND unity and Sopix/Sopix2 Inside to be irreversibly compromised with the consequence of damages or injuries to patients, operators and the environment. Failure to comply with this requirement or with the messages concerning the presence of eventual anomalies will release the manufacturer from any liability for direct and indirect injuries to persons and/or damage to property or the environment. Furthermore, the managers of the facility, customers or collaborators shall be held liable for any damage and/or accidents and/or degeneration of patients' or operators' health or of the surrounding environ-ment.*

⚠ **CAUTION**

PROTECTION AGAINST RADIATIONS

The «General principles for safeguarding and protecting the personnel and patients» must always be applied during the use of the X-ray unit.

1. *Justification of the practice*
2. *Optimization of protection principle (ALARA principle)*
3. *Individual risk and dose limits*

- *The X-MIND unity is a medical device that generates X-rays; therefore, both the patients and the operator are exposed to risks due to ionizingionizing radiation. The physician must assess the actual need for X-ray exposure.*

- *All personnel present during an x-ray examination must comply with safety regulations concerning protection against radiation. For their own safety, the operator must always keep a distance of more than 2 meters (6 ft.) from the x-ray beam.*

- *The X-MIND unity medical device must be used in compliance with the local standards in force and with the international directives concerning radiation protection.*

- *Compliance with the guidelines and indications provided by an accredited specialist in radiation protection, who will recommend, if necessary, the additional shields or precautions for every specific case.*

- *The device installation site must be shielded in compliance with the local standards in force to protect the operator, patient and other people against X-rays.*

- *The X-MIND unity device is intended to be used solely by surgeons, dentists and qualified and authorized physicians. The operator must:*
  o determine, when appropriate, the possible need for sedation and the related operating methods and precautions best suited appro-priate for the patient
  o supervise the entire x-ray examination procedure, paying attention to the indications and information from the unit.

- *The device must be used for diagnostic purposes solely by qualified and authorized dentists and/or physicians.*

- *The operator and other personnelmust keep clear from the patient during the scan.*
  The personnel involved in the radiographic examination must take all the safety measures concerning radiation protection.

- *It is the operator's responsibility to protect the patient against unnecessary or excessive radiation doses.*
- *Additional protection devices (aprons, collars, etc) are required to protect the patient from radiation.*
- *Before exposing patients with pacemakers, contact the manufacturer of the latter to ensure that the X-rays generated by X-MIND unity do not interfere with its functionality*
- *X-MIND unity generates x-rays: Before using this x-ray system please refer to the regulation in force in your area concerning paediatric patients, pregnant women and anyone with health issues that contraindicate the use of x-rays. Investigate and make sure of this condition before starting the exposure.*

This symbol indicates X-ray hazards

- *According to the paragraph 203.8.5.4 of the IEC 60601-2-65, in case you're using the X-MIND unity device together with the integrated Sopix/Sopix2 Inside sensor, it is mandatory to install and use the original rectangular beam limiting device provided by the manufacturer of the X-MIND unity.*

⚠ **CAUTION**

MECHANICAL RISK

- Pay extreme attention to the tension of the internal spring of the scissor arm in order to avoid the arm opening outward and causing injury.
- Check that the installation of the unit complies with the mechanical specifications of the support (walls, ceiling, etc..) where it is installed
- Adjustments or any kind of attempt of repairing or disassembling must only be performed by qualified and authorized service personnel.
- The X-MIND unity must not be used in environments or close to environments subjected to mechanical vibrations or mechanical shocks.
- Do not cause overbalancing of the Mobile Version due to improper pushing or leaning the device using other parts respect to the handle, or with the brakes activated, or with the scissor arm opened.

⚠ **CAUTION**

ELECTRICAL SAFETY

- The x-ray system contains high voltage. It's prohibited to inspect internal parts of the system.
- Never attempt to open the x-ray tube head.
- The covers on the X-MIND unity equipment must only be removed by qualified and authorized service personnel.
- The unit must be used only in environments that are in compliance with all the electrical safety standards set forth for medical environments.
- The unit is NOTwaterproof; it will therefore be necessary to make sure that no water or other liquids penetrate inside the equipment so as to avoid short circuits or corrosion.
- Always disconnect the x-ray system from the power supply and wait for 2 minutes before commencing to clean or disinfect orperform any maintenance operations.
- Do not connect the x-ray system to a multiple portable socket outlet (MPSO) or any type of extension cord.
- External equipment intended for connection to signal input, signal output or other connectors shall comply with the relevant product standard e.g. IEC 60950-1 for IT equipment and the IEC 60601-series for medical electrical equipment. In addition, all such combinations – systems – shall comply with the safety requirements stated in the collateral standard IEC 60601-1-1 or the general standard IEC 60601-1, edition 3, clause 16. Any equipment not complying with the leakage current requirements in IEC 60601-1 shall be kept outside the patient environment i.e. at least 1.5 m from the patient support.
- Any person who connects external equipment to signal input, signal output or other connectors has formed a system and is therefore responsible for the system to comply with the requirements. If in doubt, contact qualified medical technician or your local representative.
- It is mandatory to use an isolation device (Separation Device) to isolate the equipment located outside the patient environment from the equipment located inside the patient environment. In particular such a Separation Device is required when a network or data connection is made. The requirements on the Separation Device is defined in IEC 60601-1-1 and in IEC 60601-1, edition 3, clause 16.
- Based on the IEC 60601-1, the installation of the X-MIND unity wall version is a permanent type (fixed). IT IS NOT ALLOWED TO connect the equipment to the main supply using a plug.
- Do not touch the USB connector of the x-ray sensor and the patient at the same time.
- NEVER use the device without the presence of the lateral enclosure of the fork (example shown in the picture below) or without the proper fixing of the enclosure on the fork. In case if the Sopix/Sopix2 Inside is installed, the x-ray sensor support must also be present and properly fixed on the cover.

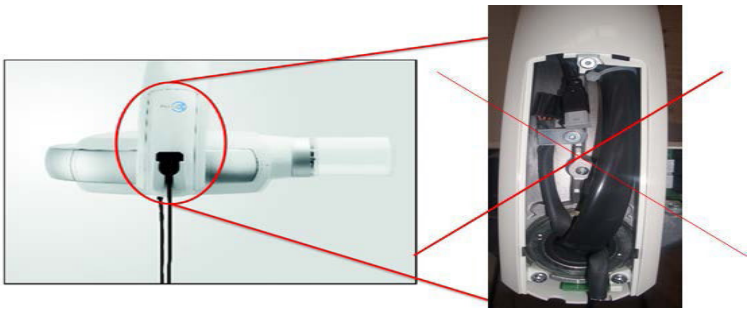

- *The cone (Beam Limiting Device) is an APPLIED PART of the system and is classified type B.*
- *The Sopix/Sopix2 Inside Sensor (optional) is an APPLIED PART of the system and is classified type BF.*

⚠ **CAUTION**

EMC COMPATIBILITY

- *EMC requirements must be considered, and the X-MIND unity must be installed and used accordingly with the specific EMC information provided in the accompanying documents.*
- *The device complies with the EMC (Electromagnetic Compatibility) according to IEC 60601-1-2. Radio transmitting equipment, cellular phones etc. shall not be used in close proximity of the unit as they could influence the performance of the system.*
- *Carefully read the indications relevant to the EMC in the dedicated appendix EMC compatibility of this manual.*

⚠ **CAUTION**

PROTECTION AGAINST EXPLOSIONS

The x-ray system MUST NOT be used in the presence of disinfectants, flammable or potentially explosive gases or vapors that might igniteand cause damage.
IIf these disinfectants must be used let the vapors completely disperse before turning on the x-ray system.

⚠ **CAUTION**

SYSTEM MODIFICATIONS OR UPGRADES

- *Modifications or upgrades of the system can be carried out only if advised by de Götzen® S.r.l. and performed by authorized and qualified personnel, using ONLY genuine original spare parts of de Götzen® S.r.l.*
- *de Götzen® S.r.l. proscribes improper, unauthorized modifications or upgrades of the device, in order to avoid malfunctioning resulting in breakdowns and/or accident for patient, operator and equipment. de Götzen® S.r.l. assumes no responsibility and, consequently, declines all responsibility with respect to direct or indirect damages to people, the device or environment due to these reasons.*
- *Do not remove or attempt to remove the plastic covers of the device.*
- *It is strictly forbidden attempt to repair electronic or mechanical parts by yourself.*
- *Disregardingthis warning can result in irreversibly compromising the overall safety of the system and can be dangerous for operators, patients and environment.*

2

X-RAY SYSTEM OVERVIEW

The “X-MIND unity” is manufactured in compliance with the following European Directives:

▪ 93/42/EEC and subsequent amendements
MEDICAL DEVICES
▪ EURATOM 96/29
IONIZING RADIATIONS

and in compliance with the following American Standard:
▪ American Radiation Performance Standard 21 CFR, Subchapter J

Many protective measures have been adopted in the design and construction of the unit, such as:

protection against the risk of electric injuries, ensured by a grounded protection conductor and in accordance with the 2nd and 3ed of the IEC 60601-1, together with the applicable worldwide international deviations.
protection against leakage radiation, made negligible by the shielded casing;
protection against excessive radiations, thanks to the immediate activation of the safety device and the ACE option (if enabled);
protection against continuous service, since the system is designed, according to standards, to not be used in radioscopy;
protection for the operator against irradiation due to the extendable hand control and cable which allows for a safety distance of more than 2 meters (6 ft.)
protection against accidental selection of the x-ray technique button selected (FILM or DIGIT) obtained, according to standards, by means of

“ELECTRO-MEDICAL” CLASSIFICATION
According to the general safety regulations EC EN 60601-1 2nd and 3rd edition on safety of medical equipment, the system is classified as: Class I - Type B

“MEDICAL DEVICES” CLASSIFICATION
According to the classification rules indicated in attachment IX of the EEC Directive 93/42 on medical devices and subsequent amendments, this system is classified as: Class IIb

“EMC” CLASSIFICATION
According to paragraph §4 of the EN 55011, this system is classified as: Group 1 - Class B

2.1. SYSTEM COMPONENTS

The X-MIND unity x-ray system (Fig.1) consists of the following components:

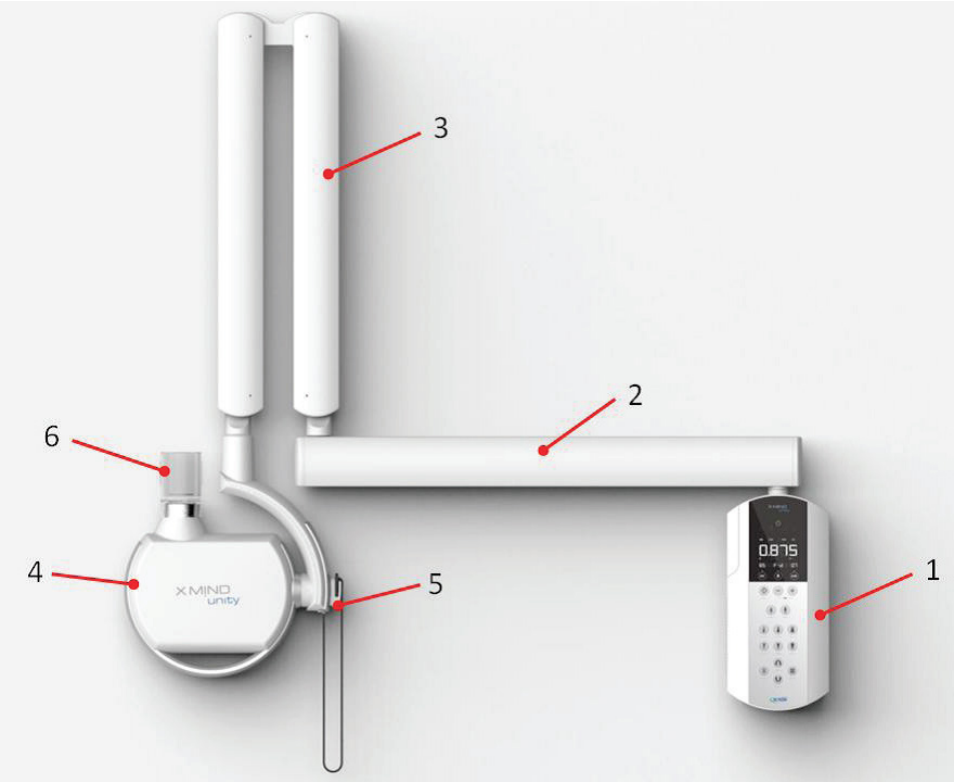

1 - X-RAY CONTROL UNIT (TIMER)
With it's clear and highly visible display this component allows for easy and clear selection, of the exposure settings, the creation of personal settings while alerting you with a visual display and an audible alert in case of incorrect operation or eventual failures.
This is possible due to the control panel which represents the operator interface between device and operator.
The timer also contains the x-ray exposure switch, which triggers the x-ray when the button is depressed.
The internal sub-mechanical architecture of the X-ray control unit provides the necessary wall framework for fixating the control unit to a wall.

2 - HORIZONTAL BRACKET
The horizontal bracket is available in 3 different lengths and represents the support for the scissor arm. Its shaft is fixed in a dedicated section in the middle of the timer (top or bottom) and allows for 180° movement.

3 - PANTOGRAPH TYPE ARM (SCISSOR)
Due to the new shape and mechanism of the articulating arm, it can be ajusted in height and depth for easy and precise movement to any position. It is equipped with internal balancing springs and made of extruded aluminum arms covered by PC-ABS material enclosures.

4 - X-RAY SOURCE ASSEMBLY (TUBEHEAD)
The tubehead of the X-MIND unity contains the x-ray tube, the high voltage board and the high frequency generator. The high voltage board, the x-ray tube and the expansion chamber are submerged in a sealed aluminum chamber containing highly dielectric insulating oil.
The expansion chamber guarantees the expansion of oil over the whole range of operating temperatures according to the technical specifications of the device.
The emission of the x-rays is electronically controlled which guarantee a great accuracy of the loading factors.
The tubehead is equipped with an angle scale indicator and is designed for easy handling and positioning of the tubehead during the x-ray examination.

5 - SENSOR AND SENSOR HOLDER (OPTIONAL, SOLD SEPARATELY)
The X-MIND unity comes already prepared to be coupled as a separate installation performed by authorized technicians on the field), with the optional Sopix/Sopix2 Inside intraoral x-ray digital sensors (manufactured and sold by SOPRO - Acteon Group), which are equipped with the ACE technology.

6 - COLLIMATOR CONE (Beam Limiting Device)
Made of transparent polycarbonate or PC-ABS, it allows for:
- correct focal spot to skin distance
- dimension, direction and centering of the x-ray beam
- implementation of different x-ray techniques (bisecting and parallel technique)

2.2. IDENTIFICATION TAGS

The identification tags on the tube head, timer and cone indicate the model number, serial number, the manufacturing date and the symbols of the main technical characteristics.
Labels for Europe:

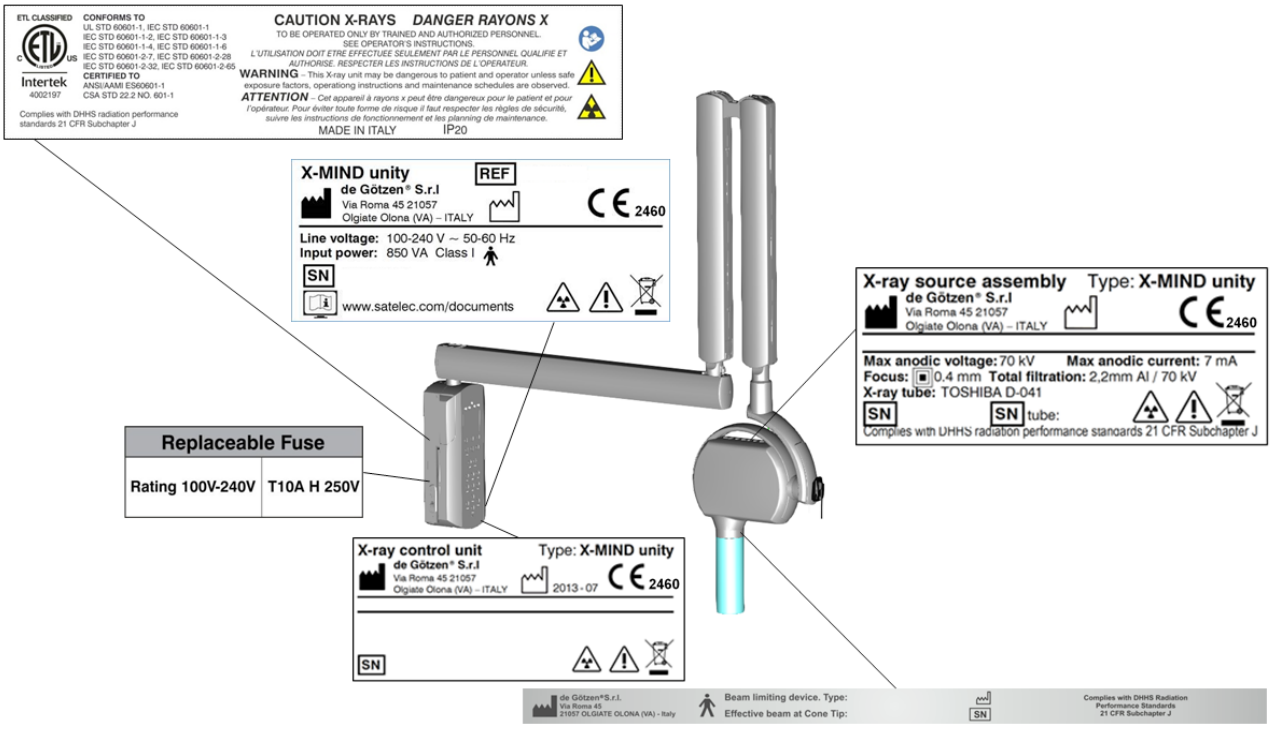

Labels for USA:

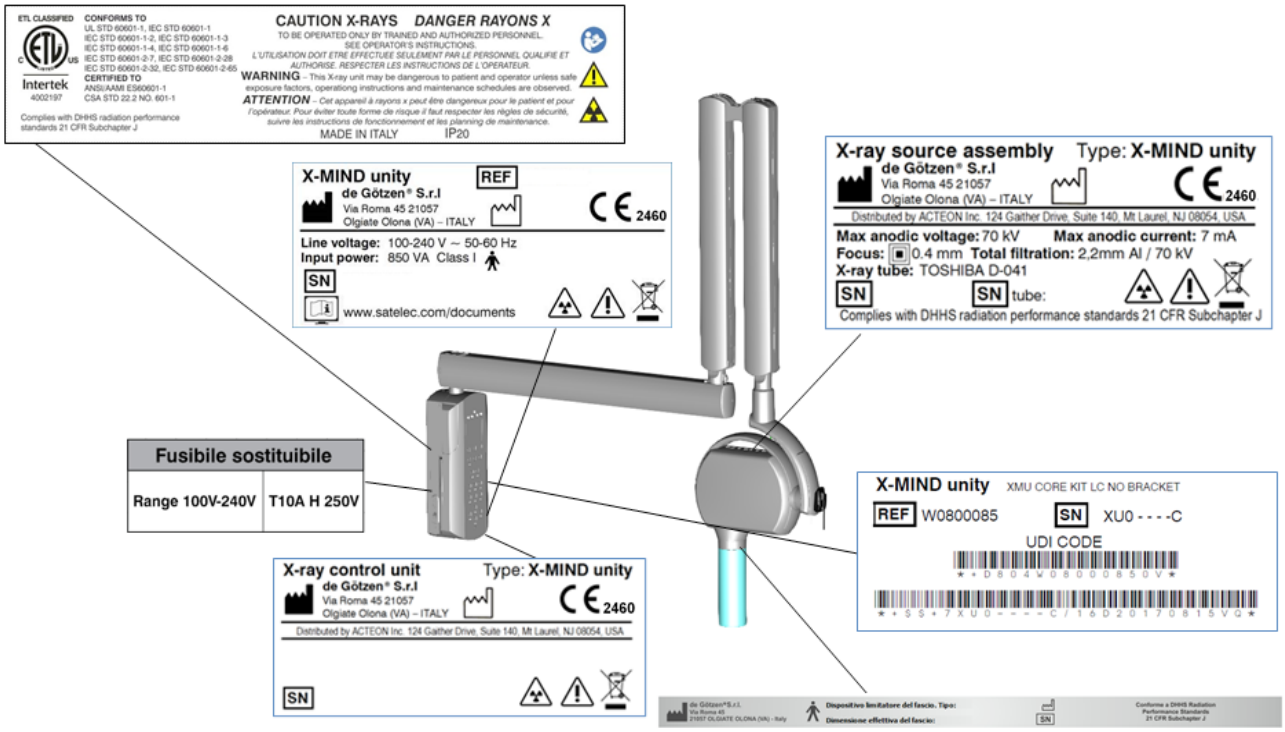

X-MIND unity global label

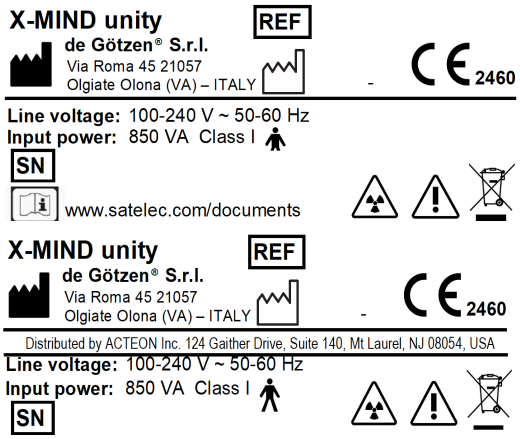

X-MIND unity Control Unit (Timer) Label

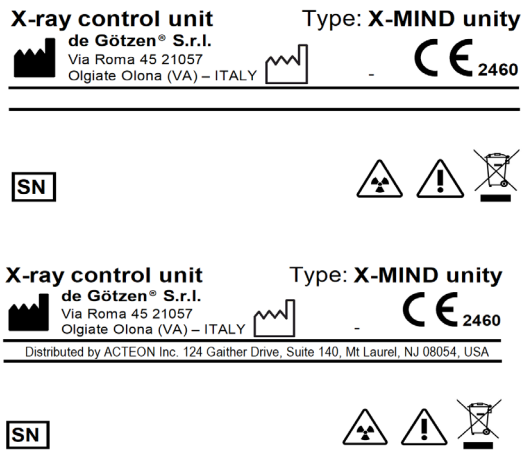

X-MIND unity X-ray source Label

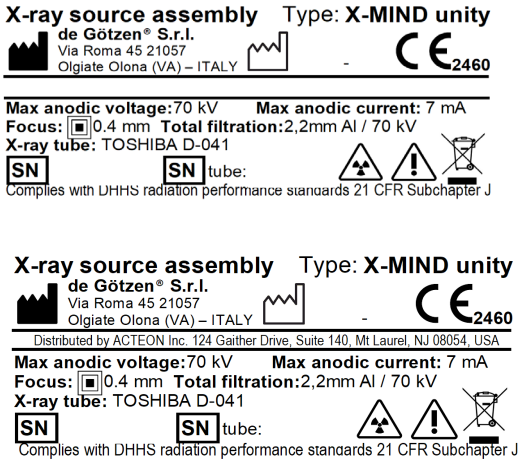

BEAM LIMITING DEVICE LABEL

TUBEHEAD GRADUATED SCALE

ETL LABEL AND X-RAY WARNING

	En: Power ON (IEC 60417)
	En: Power OFF (IEC 60417)
	En: Protective earth (IEC 60417)
	En: Applied Part: Type B (IEC 60601-1)
	Attention, refer to the attached documents
	Ionizing radiation hazard
	Emitting X-ray equipment (IEC 60417)
	Comply with the implementation standards in your country. European Council Directive 2012/19/EC (WEE) imposes the disposal or recycling of electric and electronic equipment. The product is marked with the following icon. This product must not be disposed of as domestic waste. The crossed-out wheelie bin identifies a product placed on the market after the 13th of August 2005 (see IEC EN 50419:2005). This product is subjected to Council Directive 2012/19/EC (WEEE) and implementation standards in force in your country. The product must be disposed of or recycled to protect the environment. Contact your supplier
	Size of the focal spot (small)
	Hazardous Voltage
	Electrostatic discharge sensitive device
	Pause (IEC 60417)
	X-ray command (IEC 60417)
CE XXXX	THIS SYMBOL GUARANTEES THAT THE X-RAY SYSTEM COMPLIES WITH THE REGULATIONS CONTAINED IN THE EUROPEAN DIRECTIVE EEC 93/42 AND SUBSEQUENT AMENDEMENTS REGARDING MEDICAL DEVICES
	This symbol remind that is mandatory read carefully the whole documentation and manuals provided with the medical device before perform whatever operation.

	Electronic instructions for use symbol for medical devices, according to the European Commission Regulation no. 207/2012 of March 9th, 2013.
	PUSHING PROHIBITED

FUSE LABEL

Replaceable Fuse	
Rating 100V-240V	**T10A H 250V**

✍ **NOTE**

The fuse label is located in close proximity to the main switch.

⚠ **CAUTION - ⚠ WARNING**

In the event the line fuse needs replacement you must observe all ratings and specifications declared by de Götzen® S.r.l. Call the technical support service for assistance as shown on pages 3 and 4 of this manual.

3

CONTROL PANEL OVERVIEW

1. STATUS LED
2. INFORMATION DISPLAY
3. LOADING FACTORS AND RADIOGRAPHIC TECHNIQUE BUTTONS
4. FUNCTIONAL AND EXPOSURE TIME BUTTONS
5. TYPE OF PATIENT
6. TYPE OF EXAM

3.1.STATUS LED

	Stand by
	Armed (ready to take an x-ray exposure if the exposure button is pressed)
	X-ray emission
	Pause (cooling down time after x-ray exposure)
	Error / Malfunctioning

3.2.INFORMATION DISPLAY

ACE	ACE function with the Sopix/Sopix2 Inside sensor activated
20 30	SSD (Source-skin distance)[1] 20= 20cm SSD 30= 30cmSSD
	Type of cone installed (circular beam output or rectangular beam output)
8.888	Digit display
S	Units of measurement of the irradiation time [seconds]. It is positioned below and to the left of the irradiation time display.
mGy·cm²	Units of measurement relevant to the Dose Area Product [mGy*cm2].
– +	Exp. time scale customization
	Remote exposure switch installed

1 The SSD distance depends on the type of beam limiting device installed. Make sure you have the correct type of cone installed according to the values and symbols explained in the accompanying documents and indicated on the display

3.3.SETTINGS

kV	kV set key
	X-ray detector type set key
mA	mA set key
	Memo key
− + DAP	Increase or decrease exp. time / Pushed simultaneously shows DAP

3.4.TYPE OF PATIENT

	Child / Small patient key
	Adult / Normal patient key

3.5.TYPE OF EXAMS

	Maxilla – incisors		Mandibula - incisor
	Maxilla – premolar		Mandibula - premolar
	Maxilla – molar		Mandibula - molar
	Occlusal exam maxilla / mandibula		Bite wing exam ant. / post.

4

OPERATING INSTRUCTIONS

- Toggle the main switch (1) located on the left part of the timer to the "I" position (ON).
- The display will light up.
- The main supply switch is the isolation means that connect the device (ON), or isolate the device (OFF) from the Mains Supply.

Fig. 6.2

- The "ready" green light turns on indicating that the system is <u>powered and ready for exposure</u> according to the loading factors indicated in the control panel display.
- The leds of the set parameters automatically illuminate
- The exposure time is clearly shown on the display.

⚠ CAUTION

If an error is detected when the system is turned on, the anomaly is indicated as follows:

– Intermittent beeping sound

– Intermittent flashing of the MALFUNCTION indicator

– the error code (E ....) appears on the display (refer to Chapter 8)

– all the control panel functions and x-ray emission are inhibited

In this case it is possible to reset the error pushing the "memo" key or turning the timer off and then turn it back on again.
If it is not possible to clear the error code call your local Acteon customer service as shown on pgs 3 & 4 of this manual.

PLEASE NOTE

The timer retains any previous settings when turned back on.

PLEASE NOTE

If the timer remains inactive for a few minutes, it switches to the stand-by mode. Press any key on the control panel to restore it to the operative armed mode.

Before taking an x-ray exposure, always check that the parameters selected and displayed on the control panel (see the following steps below) are suitable for the x-ray examination being performed.

5

CONFIGURATION AND TAKING AN X-RAY EXPOSURE

The “X-MIND unity“ x-ray system is factory configured in “standard mode”.
On the control panel, the led relevant to the following exposure parameters will light up:

	Ready for x-ray exposure (Armed mode)
1.050	X-Ray Exposure Time selected
	Type of cone installed (rectangular or circular shaped x-ray beam output)
20 30	SSD distance 20 [cm] (8”) = SHORT CONE (circular or rectangular) 30 [cm] (12”) = LONG CONE (circular or rectangular)
65	X-ray tube voltage Selection between: 60kV / 65kV / 70kV
07	X-ray tube current 4mA-7mA (typical suggested : 6 mA / 7mA)
F-d	Selection of the x-ray detector type : F-d : FILM, D Speed F-e : FILM, E Speed F-f : FILM, F Speed Dig : Digital X-Ray Sensor PSP : Phosphor plates
ACE	When the integrated Sopix/Sopix2 Inside sensor is installed and properly connected you can run the X-MIND unity with the ACE system activated.[2] the “ACE” code inside the list of selected type of supported detector (F-d, F-e, F-g, F-f, DIG) is available only when a Sopix/Sopix2 Inside is installed and properly connected.

2 Refer to the operator’s manual of the Sopix/Sopix2 Inside x-ray sensor for more or contact the technical support of Sopro. : ZAC Athé lia IV • Avenue des Genévriers • 13705 LA CIOTAT cedex • FRANCE • Tél +33 (0) 442 98 01 01 • Fax +33 (0) 442 71 76 90 • E-mail: info@sopro.acteongroup.com • www.sopro.acteongroup.com

The following exposure times (s) have been stored:

0,020 – 0,025 – 0,032 – 0,040 – 0,050 – 0,063 – 0,080 – 0,100 –0,125 – 0,160 – 0,200 – 0,250 – 0,320 – 0,400 – 0,500 –0,630 – 0,800 – 1,00 – 1,250 – 1,600 – 2,000 s

PLEASE NOTE

These times are in compliance with IEC 60601-2-7 standard according to the 2nd and 3rd edition of the IEC 60601-1 and with the ISO 497 series R'10 recommendations.

PLEASE NOTE

These values of the programmed exposure times MAY NOT be modified.

Certain exposure values have been predefined which depend on the selection of the operating parameters:
- cone (8"/12")
- type of patient (ADULT/CHILD)
- x-ray technique
- intra-oral exam type

PLEASE NOTE

If one so desires, it is possible to change these values by means of the dedicated key buttons previously indicated.

Possible modifications of the exposure values:
- x-ray anodic voltage (60kV/65kV/70kV)
- x-ray anodic current (typical: 4mA/6mA/7mA)
- type of patient (ADULT/CHILD)
- x-ray technique

—> refer to chapter 5

Possible modifications of the parameters:
- Number of exposure switches
- Cone size (20cm - 8" / 30cm - 12")
- Cone type (Square / Round)

5.1.CHECK THE SELECTED TYPE OF CONE

The icon cone type icon (shape of the beam limiting device) in use should be illuminated

Icon “rectangular” ON: Indicates that the selected tube head is equipped with rectangular cone

Icon “round” ON: Indicates that the selected tube head is equipped with round cone

PLEASE NOTE

This selection can be enabled or disabled by means of a specific procedure that has to be performed by an authorized and trained technician only.
Contact your authorized installer or the local Acteon Customer Service number on page 3 & 4 of this manual for further information.

PLEASE NOTE

After the modification, default exposure values will be automatically changed according to the new settings.

CAUTION

Before making an exposure, be sure that you are using the same cone type and size indicated on the display of the control unit, otherwise all the pre-programmed exposure settings and relevant dose related information will be completely incorrect!

5.2.CHECK THE SOURCE TO SKIN DISTANCE

Make sure the cone being used matches the type indicated by the cone length icon which should be illuminated on the control panel at this time (source-skin distance = SSD)

Icon 20 [cm] 8″ ON:

Indicates that the selected tube head is equipped with 8″ = 20cm (SSD) cone

Icon 30 [cm] 12″ ON:

Indicates that the selected tube head is equipped with 12″ = 31cm (SSD) cone

PLEASE NOTE

The modification, installation and configuration of a different type of beam limiting device can be enabled or disabled only by authorized and trained service technician.
Contact your authorized installer or the local Acteon Customer Service number indicated on page 3 & 4 of this manual for further information.

PLEASE NOTE

After the modification, default exposure values will be automatically changed.

CAUTION

Before making an exposure, be sure that you areusing the same cone type and size indicated on the display of the control unit otherwise all the pre-programmed exposure settings and relevant dose related information will be completely incorrect!
It is not contraindicated to use any type of beam limiting other than those provided by de Götzen S.r.l.

5.3. CHECK THE SELECTED X-RAY TUBE VOLTAGE

The set x-ray voltage will be shown on the display

To change the selected value press "kV" key

until you have reached the desired value
It is possible select x-ray voltage among these values: 60kV/65kV/70kV

5.4.CHECK THE SELECTED X-RAY TUBE CURRENT

The set x-ray current will be shown on the display

To change the selected value press "mA" key

until you reached the desired value
It is possible select x-ray current among these values: 4-7mA (±1mA step)

- 4 mA
- 5 mA
- 6 mA
- 7 mA

5.5.CHECK THE SELECTED TYPE OF PATIENT

The led (at the bottom of the key) relevant to the selection of the desired patient size should be illuminated or

led CHILD ON 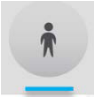 indicates that the x-ray system is set for a patient with a small physique

led ADULT ON indicates that the x-ray system is set for a patient with a large physique

Alternately pressing this button switches from child to adult settings.

PLEASE NOTE

After the modification, the default exposure values will be automatically changed

5.6.CHECK THE SELECTED X-RAY DETECTOR SUPPORT (FILM/DIGITAL/PSP)

The letter of the desired speed film or sensor will be shown on the display 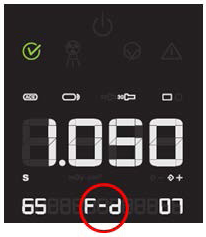

- letter D indicates that the x-ray system is set for use with D speed film
- letter E indicates that the x-ray system is set for use with E speed film
- letter F indicates that the x-ray system is set for use with F speed film
- ACE indicates that the x-ray system is set for use with the integrated Sopix/Sopix2 Inside sensor system and with the ACE system activated from the X-MIND unity side (refer to specific chapter 5.10 for more information
- Digit indicates that the x-ray system is set for use with external digital x-ray sensors
- PSP indicates that the x-ray system is set for use with external phosphor plates

Changing the selection:

To change the selected value press the dedicated key until reaching the desired setting. 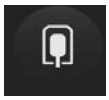

PLEASE NOTE

After the modification, the default exposure values will be automatically changed.

5.7.CHECK THE SELECTED EXAM TYPE

5.7.1. PERIAPICAL EXAM

The led at the bottom of the selected teeth should be illuminated

The upper row identifies the elements relevant to the upper jaw, the lower row identifies the elements relevant to the lower jaw.

To change the selection: press the key relative to the desired tooth

5.7.2. OCCLUSAL EXAM

The led of the selected type of exam should be illuminated or

led MANDIBULA ON indicates that the x-ray system is set for occlusal exam of the lower jaw.

led MAXILLA ON indicates that the x-ray system is set for occlusal exam of the upper jaw.

To change the selection: Press the button again

5.7.3. BITEWING EXAM

The led of the selected type of exam should be illuminated or

led ANT ON indicates that the x-ray system is set for anterior bite-wing exam.

led POST ON indicates that the x-ray system is set for posterior bite wing exam.

5.8.CHECK THE SELECTED IRRADIATION TIME

Before proceeding with the exposure check the selected time on the display.
To adjust the exposure time use the following keys ("+" or "–"):

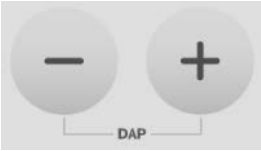

WARNING

The modification of the exposure time is momentary and will be lost unless it is saved. (Refer to Chapter 7) To restore to the previous values, press one of the non-lit keys on the control panel.

5.9.CHECK THE DOSE AREA PRODUCT VALUES

The DAP values [mGy*cm2] relevant to the combination of the technique factors and settings selected for the exposure, can be checked by simultaneously pressing the following keys shown belowon the x-ray control unit keyboard of the X-MIND unity. The DAP value will be shownd on the display instead of the exposure time. The icon relevant to the units of measurements will change accordingly.

To show the DAP values on the display:

BEFORE EXPOSURE :
Set the desired settings on the control unit (kV, mA, exp. time, etc.) and press the 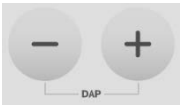

keys in order to show the expected DAP nominal values.

AFTER EXPOSURE :
press together and keep pressed for 3 seconds 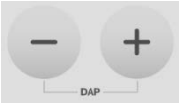

keys in order to show the expected DAP nominal values relative to last emission settings and last emission effective value.

PLEASE NOTE

The reference values of DAP visualized on the display are reported in Annex A.

5.10. ENABLE ACE MODE (OPTIONAL SOPIX/SOPIX2 INSIDE INSTALLED)

5.10.1. IMPORTANT NOTES ABOUT ACE TECHNOLOGY AND X-MIND UNITY

The aim of the ACE technology is to allow the termination of the x-ray exposure enough irradiation is received, thus minimizing any unwanted excessive dose and overexposures.

With this option enabled, the control system of X-MIND unity and Sopix/Sopix[2] Inside sensor will automatically stop the x-ray radiation exposure at the minimum needed time calculated by the ACE technology[3].

⚠ CAUTION

INSTALLATION OF THE SOPIX/SOPIX2 INSIDE INTRAORAL X-RAY DIGITAL SENSOR

The X-MIND unity is already partially prepared for the integration only of the optional Sopix/Sopix2 Inside intraoral x-ray digital sensor manufactured by Sopro-Acteon Group. For the proper and safe installation of the Sopix/Sopix2 Inside sensor it is mandatory to strictly follow the instructions and accompanying documents relevant to the Sopix/Sopix2 Inside and all the recommendations contained in the accompanying documents relevant to the X-MIND unity.

The X-MIND unity has been certified by Accredited Laboratories ONLY for the integrated use with the Sopix/Sopix2 Inside x-ray digital intraoral sensor, according to the requirements stated by the applicable standards. It is strongly advised not to connect, try to connect or operate in any way any device other than the Sopix/Sopix2 Inside sensor manufactured by Sopro. Disregarding this warning can result in the overall safety of the X-MIND unity to be irreversibly compromised with damaging consequences or injuries to patients, operators and the environment.. Failure to comply with this requirement or with the messages concerning the presence of eventual anomalies will release the manufacturer from any liability for direct and indirect injuries to persons and/or damage to property or the environment. Furthermore, the managers of the facility, customers or collaborators shall be held liable for any damage and/or accidents and/or degeneration of patients' or operators' health or of the surrounding environment.

PLEASE NOTE

The ACE technology, implemented in the X-MIND unity - Sopix/Sopix2 Inside integration was developed to correct exposure times ONLY and not to change the loading factors set by the operator (kV, mA) like in CT setups for example. The ACE technology will work only if the ACE option is enabled.
In the ACE mode, the Sopix/Sopix[2] Inside sensor accumulates the photodiodes values during the image acquisition. If the calculated value reaches one half of the overexposure value, a shut-off signal is sent to the X-MIND unity x-ray generator.
If ACE is not activated, the patient will be subjected to an x-ray radiation dose equivalent to the maximum x-ray exposure time set just prior to the x-ray exposure5 on the x-ray control unit (timer).

PLEASE NOTE

The following parameters are sent to the Sopro Imaging software (developed by Sopro-Acteon Group) after the x-ray exposure if the ACE option is activated and these parameters will be seen in the image properties. (Always refer to the Sopro software and Sopro device manuals)
- Settings: kV and mA set by the operator on the X-MIND unity control unit before the x-ray exposure
- Time Set: nominal x-ray irradiation time set by the operator on the X-MIND unity control unit before the x-ray exposure
- Time Done: Effective exposure time: Time Done ≤ Time Set)
- DAP: effective Dose Area Product delivered based on the effective exposure time intervention the technique factors and type of beam limiting device installed

3 In order to set properly the ACE settings refer to the accompanying documents relevant to the Sopix/Sopix2 Inside and Sopro Imaging, manufactured by SOPRO –Acteon Group.
4 In case of non-intervention of the ACE, the irradiation time will be within the tolerance admitted by the particular standard IEC 60601-2-7: ±10% + 1ms), with reference the irradiation time set on the X-MIND unity control unit timer.

⚠ **CAUTION**

The ACE technology protects against overexposures, not underexposures. If the exposure time selected by the operator is not relevant for the diagnostic examination being performed, the system will not correct any missing imaging information arising from incorrect irradiation times or technique factors used. Before taking any x-ray exposure the operator has the full responsibility to check that the irradiation time and all other selected technique factors as well as instructions for use as described in the official accompanying documents are correct for the diagnostic examination being performed.

PLEASE NOTE

The Nominal Shortest Irradiation Time with ACE enabled is 0.03 s

5.10.2. HOW TO USE THE X-MIND UNITY WITH SOPIX/SOPIX2 INSIDE & ACE TECHNOLOGY

⚠ **CAUTION**

The operator must always verify communication between Sopix/Sopix² Inside and X-Mind unity by making sure the «ACE» logo on the control unit displays is illuminatedthe "ACE" logo on the control unit display, before each acquisition.

⚠ **CAUTION**

The operator must set up the appropriate exposure times according to the type of examination.

⚠ **CAUTION**

Please perform the exposure using an activated x-ray sensor to transfer the images properly.

⚠ **CAUTION - WARNING**

Do not connect an extension USB cable to the USB cable exiting from the X-MIND unity.

⚠ **CAUTION - WARNING**

When using the Sopix family of sensors, strictly follow the instructions found in the accompanying documents supplied by Sopro . These are specific only to Sopro Imaging software and Sopix/Sopix2 Inside, both made by Sopro-Acteon Group.

To activate and use the ACE mode on the X-MIND unity please follow the instructions below:

1. Install and connect "Sopix Inside" or "Sopix2 Inside" to the X-MIND unity system (refer to Sopix Inside or Sopix2 Inside installation manual and X-MIND unity Installation and Maintenance Manual).

2. When the Sopix/Sopix² Inside is connected to a PC (through its specific USB cable connection) and armed (ready to acquire) by SOPRO Imaging software, the X-Mind unity will automatically detect the sensor. Once the communication between Sopix/Sopix² Inside and X-Mind unity is established, the indication of the selected X-Ray detector support will automatically switch into **"ACE"** icon on the X-Mind unity display. The operator does not need to manually choose the X-Ray detector support on the X-ray control unit of the X-MIND unity. A beep sound is generated when the X-MIND unity first detects an ARMED Sopix/Sopix² Inside

3. To start the acquisition, the operator must set all the desired exposure factors (as with any x-ray imaging procedure) and press and hold the exposure switch as you would with any normal x-ray emission procedure., the ACE technology automatically stops the X-ray emission in order to reduce unecessary X-ray exposure to the patient After the exposure is taken , the X-MIND unity display will show the real exposure time, then the

icon will light up for 5 seconds together with the x-ray cooling pause time (which is determined by the effective exposure time).

4. At the end of the cooling cycle, the control unit reverts back to normal operation while still maintaining the "ACE" mode status provided the sensor has not been disarmed manually from Sopro Imaging.

5. If the operator wants to use another detector or to deactivate the ACE technology automatic stop feature temporaly, the operator must switch to the appropriate detector support on the control unit. As soon as the Sopix/Sopix2 Inside is still connected and operative, this change will be active only for one shot. The X-Ray detector support type will automatically switch into ACE mode again after this single shot, to switch to another detector support, press 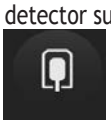 on the control until reaching the desired option.

6. If the communication between SOPIX/SOPIX² Inside and X-Mind unity is lost, the **ACE** logo on the X-Mind unity display will switch to DIG. There is no indication or message shown on SOPRO Imaging software. If an acquisition is performed while connection/communication is lost the X-MIND unity will expose according to the exposure value selected on the x-ray timer and so the ACE technology will not "stop" the X-Ray emission. .. This will also be evident due to the longer beep signal and acquisition time as well as the positioning change of the indicator ball on the energy graph in the Image properties of SOPRO Imaging In normal X-Mind unity operation the operator will see the effective exposure time inside SOPRO Imaging in the information bubble. As always the image will always be protected from overexposure because of "classic" **ACE** technology, integrated on all SOPRO sensors.

PLEASE NOTE

On the X-mind unity timer, the "ACE" logo appears in the list of the different types of X-Ray detector selections (F-d, F-e, F-g, F-f, DIG, PSP) only when a Sopix/Sopix2 Inside is installed, properly connected, and armed to acquire an image.

POSSIBLE COMBINATIONS:

COMBINATIONS	ACE FUNCTIONING
A - Sopix/Sopix² Inside ONLY installed	The sensor is activated by SOPRO Imaging and the X-MIND unity control unit automatically detects the sensor. ACE on control unit is active when Sopix Inside is armed. To disable the Sopix/Sopix2 Inside and therefore ACE on control unit: For one exposure -> select the DIG icon on control unit For more exposures -> disconnect Sopix inside USB cable from PC or disarm it on SOPRO Imaging (refer to Sopro Instructions).
B - (*)Sopix/Sopix² Inside AND other Sopix externally connected to the same PC	Both sensors armed by SOPRO Imaging and X-MIND unity control unit automatically detects the "inside" sensor. ACE is active when Sopix/Sopix² Inside is armed. To disable Sopix/Sopix² Inside and therefore ACE on the X-MIND unity control unit: For one exposure -> select the DIG icon support on the X-MIND unity control unit. For consecutive exposures -> disconnect Sopix/Sopix2 Inside USB cable. Follow strictly Please follow the exact instructions provided by Sopro-Acteon Group when acquiring imageswith multiple Sopix famly of sensors connected to the same PC
C - Sopix/Sopix² Inside AND other manufacturers sensors (NO Sopix) connected to the same PC	Sopix/Sopix² Inside is armed by SOPRO Imaging. Ext. sensor is armed by its own software. ACE is active when Sopix/Sopix² Inside is armed. To disable Sopix/Sopix² inside and therefore ACE on control unit: a -For one exposure -> select DIG support on control unit. b - For more exposures -> disconnect Sopix/Sopix2 Inside USB cable or disarm it on SOPRO Imaging.
D - ONLY Other manufacturers external sensors (NO Sopix/Sopix² Inside)	External sensor is armed by its own software. Use the X-MIND unity as you would in normal digital procedure. ACE on control unit is not active.

Refer to the following chart for further details.

Combination A	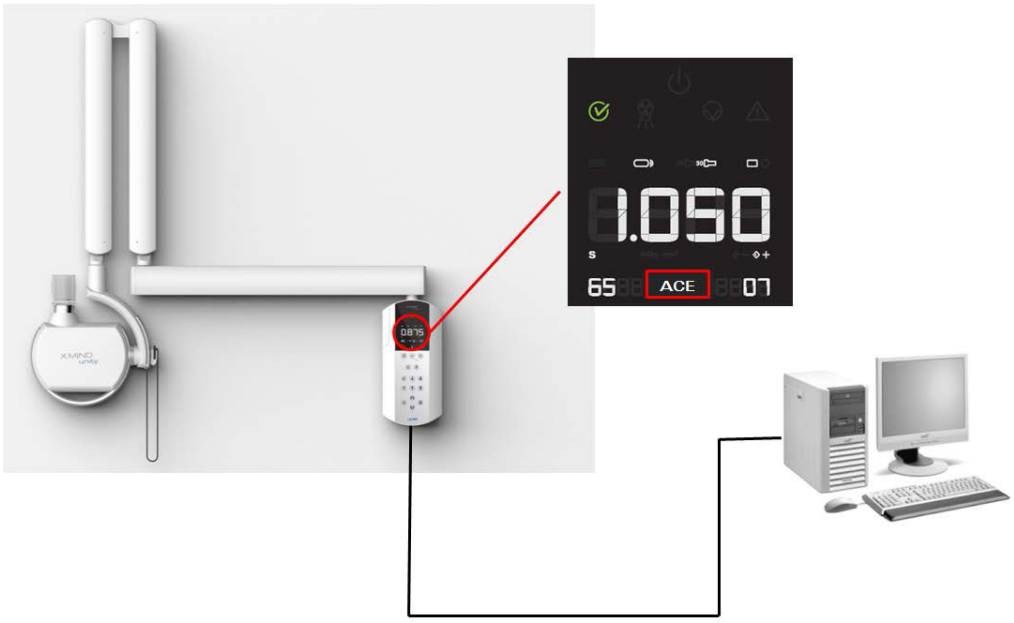

Combination B	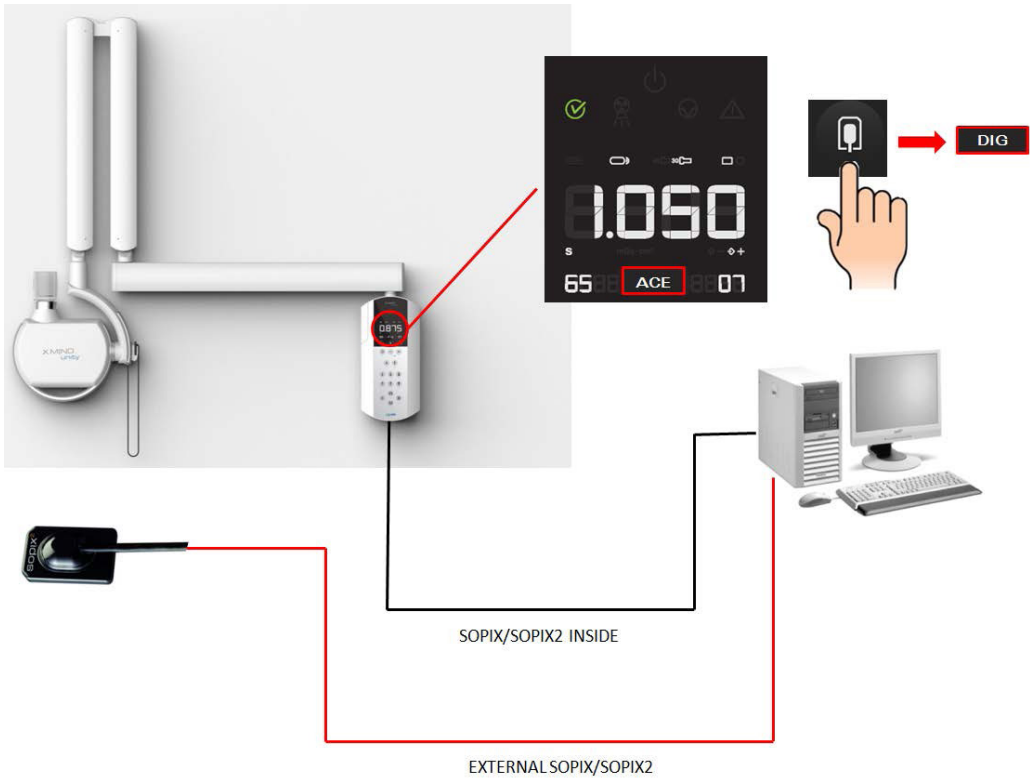
Combination C	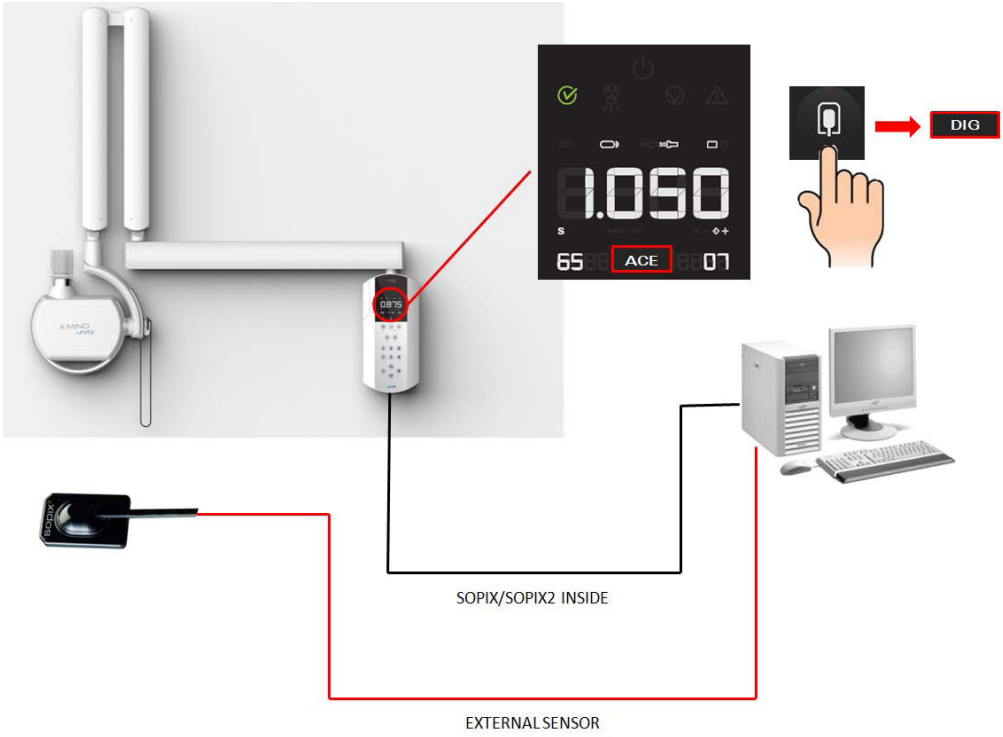

Combination D	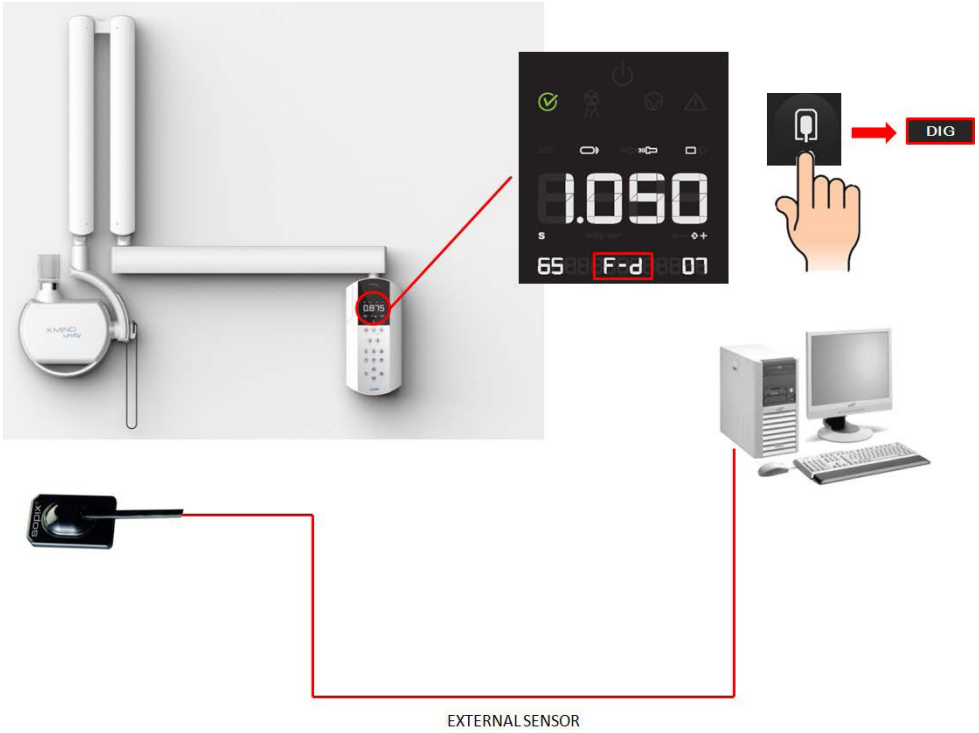

PLEASE NOTE

(*) Sopix/Sopix2 Inside AND Sopix external sensor: If using in this fashion both sensors will be armed and ready for exposure at the same time.
Please only use the Sopix/Sopix2 Inside sensor when the ACE icon is illuminated on the X-Mind unity display.
In case accidentally is exposed the external sensor to prevent accidental radiation exposure to the patient or office staff while the ACE mode is active, the X-MIND unity stops the exposure automatically after 20ms

5.11. POSITIONING THE PATIENT

Comfortably seat the patient and follow the standard intra-oral procedures for correct patient positioning.

5.12. POSITIONING FILM OR SENSOR

Positioning either the film or the digital sensor depending on the technique and exam type to be used.

WARNING

According to the x-ray examination to perform and the relevant technique, it is strongly recommended to use a shielded, open-ended position-indicating device (PID, x-ray detector support holder) in order to maintain precise positioning during the examination and also to help the operator avoid common errors by specifically directing the X-ray beam toward the receptor.

CAUTION

The disposable protection covers used for any type of x-ray detector support, can cause dangerous injuries even death if swallowed!
Please use the disposable protectors as recommended by their respective manufacturers and make sure they are firmly secured on the support and cannot move in the mouth or in the throat of the patient!
It is furthermore mandatory to carefully follow the operating instructions and take observe all safety measures according to the respective manufacturers of the x-ray detectors (FILM/X-RAY DIGITAL SENSORS/PSP, etc.), used by the operator.

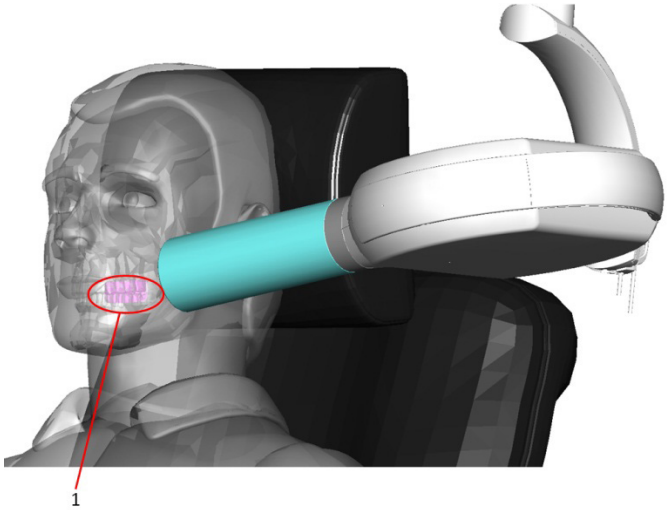

Sensor or film positioned

5.12.1. PARALLELING TECHNIQUE

The paralleling technique results in good quality x-rays with a minimum of distortion and is the most reliable technique for taking periapical x-rays. The film is placed parallel to the long axis of the tooth in question and the central x-ray beam should be directed perpendicular to the long axis of the tooth.

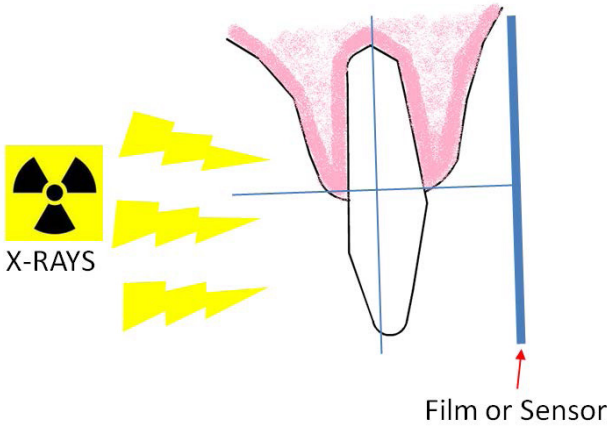

5.12.2. BISECTING ANGLE TECHNIQUE

The bisecting angle technique is based on the principle of aiming the central ray of the x-ray beam at right angles to an imaginary line which bisects the angle formed by the longitudinal axis of the tooth and the plane of the film or sensor. A bisector is a plane or line that divides a line or angle into two equal portions.

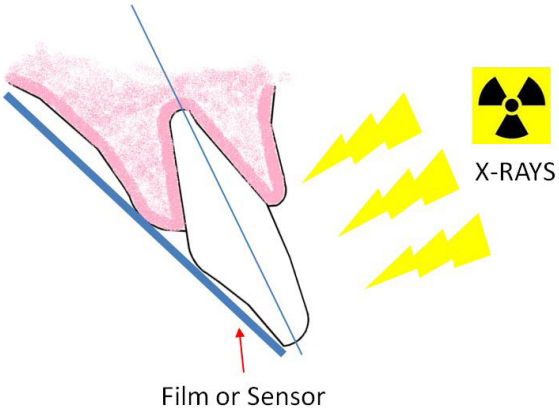

⚠ **CAUTION - ⚠ WARNING**

Whenusing the X-MIND unity together with the integrated Sopix/Sopix² Inside x-ray digital sensor, be extremely certain that the complete sensor equipment and its holder are properly installed and safely connected to the X-Mind unity.
The Sopix/Sopix² Inside must always be well maintained and properly functional.
Always assure that the sensor holder is properly fixed and the relevant support screws are properly tightened.
Always refer to the Operator's Manual and to the Installation and Maintenance Manual of the Sopix/Sopix² Inside equipment.

⚠ **CAUTION - ⚠ WARNING**

NEVER operate the system with sensor cover or any other enclosure disassembled or assembled improperly. This can endanger the safety of the patient and / or operator

Sopix/Sopix² Inside sensor holder properly installed

5.13. POSITIONING THE X-RAY GENERATOR AND COLLIMATOR (BEAM LIMITING DEVICE)

⚠ **CAUTION - ⚠ WARNING**

Before each examination, it is mandatory to use a disposable protecting sheath device over the collimator cone (Beam Limiting Device) that is designed to cover the end part of the X-ray unit, which is more susceptible of being directly contaminated during the X-ray exposure (class I Medical Device Directive 93/42/EEC and subsequent amendments). It can come into contact with the patient's skin: verify biocompatibility according to the principles given in the ISO 10993 series of standards. Refer for details to the disposable use protection's instructions for use.

Follow the standard intra-oral procedures, positioning the cone as well as referring to the graduated scale on the tube head.

5.13.1. SUGGESTED INCLINATION ANGLES

MAXILLA	
Molar	**35°**
Premolar and canine	**45°**
Incisor	**55°**
Bite-wing exam	**10°**

Bite-wing exam	**0°**
Incisor	**-20°**
Premolar and canine	**-10°**
Molar	**-5°**
MANDIBLE	

5.14. MAKE THE EXPOSURE

PLEASE NOTE

To obtain the best radiological diagnostic results, pay extreme attention in all the steps of the process: positioning the patient, the x-ray generator and collimator, exposing the x-ray detector (film/digital sensor/plates); and processing the film or the digital image acquisition and processing chain.

⚠ CAUTION

It is mandatory for the operator to check the parameters before making any exposure with either the local or remote exposure switch.

⚠ CAUTION

Always maintain audio and visual contact with the patient and unit during the x-ray exposure: the operator is required to monitor the patient and the X-Mind unity parameters throughout the entire duration of the x-ray examination.

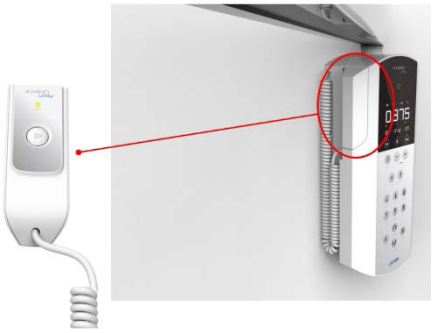

1. Remove the exposure switch from the timer and move away from the tube head maintaining a safety distance of at least 2 meters (6 ft) to be able to constantly check the x-ray exposure.
2. Advise the patient to remain still
3. On the exposure switch (local or remote if installed) press the key(the X-RAY button is positioned on the top of the exposure
4. switch) and keep it pressed until the acoustic signal (beep) stops and the yellow led turns off

Local Exposure Switch

Remote Exposure Switch

PLEASE NOTE

If the "X-RAY" button is released before the end of the selected exposure time, the exposure is immediately interrupted and an error message appears on the display.

1. At the end of the exposure the yellow led momentarily illuminates indicating the PAUSE state.
2. The display indicates the actual exposure time
3. All the timer functions are inhibited until the PAUSE led extinguishes

PLEASE NOTE

The pause time is necessary to allow the x-ray tube to cool down.
This time is calculated by the microprocessor, depending on the exposure time, with a ratio of 1:30 (30 seconds of pause time are required for 1s of exposure)

A NEW EXPOSURE WILL BE POSSIBLE AFTER THE YELLOW LED HAS TURNED OFF
REPEAT THE OPERATIVE SEQUENCE ABOVE TO MAKE NEW EXPOSURE

PLEASE NOTE

After a period of inactivity, the timer goes automatically in stand-by mode (only the green led on the display is illuminated). In this state, the system is not armed and therefore, is not possible to perform x-ray exposures.

To re-activate the control unit into armed mode just press any key on the keypad.

The X-MIND unity remote exposure switch.

1=Safety key switch

CAUTION

If a remote exposure switch is installed and the system is on, both the remote and local exposure switches are activated.

If the "ready" *and the "remote switch"* *icon are illuminated on the control unit the system will emit x-rays when the remote exposure switch is pressed.*
It is mandatory to disable the control unit by turning the safety key to "0" and remove the key to avoid accidental exposures when not in use.

CAUTION

It is extremely important not to use a remote exposure switch other than the original part provided by de Götzen S.r.l. - Acteon Group for operating the X-MIND unity.

PLEASE NOTE

FUNCTIONING OF THE X-MIND unity light

By default setting, the X-MIND unity light (when installed) is ON (lit) when the X-MIND unity is in ARMED mode *.*
When the X-MIND unity goes in stand-by or is switched off, the X-MIND unity light will go out.
For additional information concerning the functioning of the X-MIND unity light please refer to the Installation & Maintenance Manual

5.15. TRANSPORT AND POSITIONING OF THE MOBILE STAND

X-MIND Unity has also mobile version and it is sustained by the stand as shown in the following figure:

Generally, X-Mind Unity mobile version can be in the two following positions:

1. Transport position
2. Operative position

The following steps should be taken in order to transport the mobile version of the device:

1. Unplug the power supply cable
2. Close the scissor arm

3. Make sure all the four wheels are not activated

4. Transport the device to a desired position using the handle

5. Activate brakes of all four wheels

⊘ PROHIBITION

Pushing prohibited:
pushing or leaning the device using other parts respect to the handle, or with the brakes activated, or with the scissor arm opened, could overbalance the equipment.

6. Plug the power supply cable
7. Perform the settings and the x-ray exposure as described in section 5 operating instruction

6

CHARTS OF DEFAULT EXPOSURE VALUES

The charts below indicate the predefined exposure values stored in the "X-MIND unity" x-ray system.

PLEASE NOTE

The following exposure values are only indicative and the manufacturer cannot warranty the universal applicability of them for any kind of circumstances or type of x-ray sensor used, since variations and inaccuracies may arise from sensor to sensor and may require adjustments to accommodate local configurations (software, film processing, digital processing, CCD or CMOS types, etc.)
Therefore you must establish for each support used and for each type of patient the correct technique factors (kV, mA, s) settings needed.
The operator has the full responsibility to determine and implement the correct technique factors required in accordance the type of x-ray examination being performed.
Before performing an intraoral radiograph by any Digital X-ray sensor (CMOS or CCD) or Phosphor Plates (PSP), the operator must imperatively verify and eventually adjust the preprogrammed exposure time setting of the X-MIND Unity along with the instructions in the accompanying document of the sensor

PLEASE NOTE

When selecting the kV you can follow this general rule:
Lower kV - high contrast images useful for endodontic diagnosis, apex and bone structures.
Higher kV - wider gray scale. Useful for diagnosis of periodontal pathologies.

CAUTION

In radiologic physics the x-ray beam intensity is measured in terms of air kerma (mGy), the unit that indicates the amount of radiation in an x-ray beam.
The x-ray beam intensity is proportional to the x-ray tube current (mA): doubling the tube current will double the x-ray beam intensity.
The x-ray beam intensity is proportional to the exposure time (s): doubling the exposure time will double the x-ray beam intensity.

PLEASE NOTE

To modify the default exposure times refer to Chapter 7.

6.1.SHORT CONE: 8 INCHES – 20 CM SDD

8 inches – 20 cm SSD		FILM D		FILM E		FILM F	
70 kV – 6 mA		Child	Adult	Child	Adult	Child	Adult
Maxillary	Incisor	0,125 s	0,2 s	0,08 s	0,125 s	0,063 s	0,1 s
	Premolar	0,16 s	0,25 s	0,1 s	0,16 s	0,08 s	0,125 s
	Molar	0,2 s	0,32 s	0,125 s	0,2 s	0,1 s	0,16 s
Mandibular	Incisor	0,1 s	0,16 s	0,063 s	0,1 s	0,05 s	0,08 s
	Premolar	0,125 s	0,2 s	0,08 s	0,1 s	0,063 s	0,1 s
	Molar	0,125 s	0,2 s	0,08 s	0,125 s	0,063 s	0,1 s
Bitewing	Anterior	0,1 s	0,16 s	0,063 s	0,1 s	0,05 s	0,08 s
	Posterior	0,125 s	0,2 s	0,08 s	0,125 s	0,063 s	0,1 s
Occlusal	Maxillary	0,25 s	0,32 s	0,16 s	0,2 s	0,125 s	0,16 s
	Mandibular	0,25 s	0,32 s	0,16 s	0,2 s	0,125 s	0,16 s

8 inches – 20 cm SSD		FILM D		FILM E		FILM F	
65 kV – 7 mA		Child	Adult	Child	Adult	Child	Adult
Maxillary	Incisor	0,16 s	0,25 s	0,1 s	0,16 s	0,08 s	0,125 s
	Premolar	0,2 s	0,32 s	0,125 s	0,2 s	0,1 s	0,16 s
	Molar	0,25 s	0,32 s	0,16 s	0,25 s	0,125 s	0,16 s
Mandibular	Incisor	0,1 s	0,16 s	0,063 s	0,1 s	0,05 s	0,08 s
	Premolar	0,125 s	0,2 s	0,08 s	0,125 s	0,063 s	0,1 s
	Molar	0,16 s	0,25 s	0,1 s	0,16 s	0,08 s	0,125 s
Bitewing	Anterior	0,125 s	0,2 s	0,08 s	0,125 s	0,063 s	0,1 s
	Posterior	0,16 s	0,25 s	0,1 s	0,16 s	0,08 s	0,125 s
Occlusal	Maxillary	0,25 s	0,4 s	0,16 s	0,25 s	0,125 s	0,2 s
	Mandibular	0,25 s	0,4 s	0,16 s	0,25 s	0,125 s	0,2 s

8 inches – 20 cm SSD		FILM D		FILM E		FILM F	
60 kV – 7 mA		Child	Adult	Child	Adult	Child	Adult
Maxillary	Incisor	0,2 s	0,32 s	0,125 s	0,2 s	0,1 s	0,16 s
	Premolar	0,25 s	0,4 s	0,16 s	0,25 s	0,125 s	0,2 s
	Molar	0,32 s	0,5 s	0,2 s	0,32 s	0,16 s	0,25 s
Mandibular	Incisor	0,16 s	0,25 s	0,1 s	0,16 s	0,08 s	0,125 s
	Premolar	0,2 s	0,32 s	0,125 s	0,2 s	0,1 s	0,16 s
	Molar	0,2 s	0,32 s	0,125 s	0,2 s	0,1 s	0,16 s

Bitewing	Anterior	0,2 s	0,25 s	0,125 s	0,16 s	0,08 s	0,125 s
	Posterior	0,2 s	0,32 s	0,125 s	0,2 s	0,1 s	0,16 s
Occlusal	Maxillary	0,4 s	0,5 s	0,25 s	0,32 s	0,2 s	0,25 s
	Mandibular	0,4 s	0,5 s	0,25 s	0,32 s	0,2 s	0,25 s

8 inches – 20 cm SSD		SOPIX2 Inside		Digital X-ray Sensor (CMOS or CCD)		Phosphor plates (PSP)	
70 kV – 6 mA		Child	Adult	Child	Adult	Child	Adult
Maxillary	Incisor	0,04 s	0,05 s	0,04 s	0,05 s	0,08 s	0,1 s
	Premolar	0,05 s	0,063 s	0,05 s	0,063 s	0,1 s	0,125 s
	Molar	0,063 s	0,08 s	0,063 s	0,08 s	0,125 s	0,16 s
Mandibular	Incisor	0,032 s	0,04 s	0,032 s	0,04 s	0,063 s	0,08 s
	Premolar	0,04 s	0,05 s	0,04 s	0,05 s	0,08 s	0,1 s
	Molar	0,05 s	0,063 s	0,05 s	0,063 s	0,1 s	0,125 s
Bitewing	Anterior	0,04 s	0,05 s	0,04 s	0,05 s	0,08 s	0,1 s
	Posterior	0,05 s	0,063 s	0,05 s	0,063 s	0,1 s	0,125 s
Occlusal	Maxillary	0,08 s	0,1 s	0,08 s	0,1 s	0,16 s	0,2 s
	Mandibular	0,08 s	0,1 s	0,08 s	0,1 s	0,16 s	0,2 s

6.2.LONG CONE: 12 INCHES – 30 CM SDD

12 inches – 30 cm SSD		FILM D		FILM E		FILM F	
70 kV – 6 mA		Child	Adult	Child	Adult	Child	Adult
Maxillary	Incisor	0,25 s	0,4 s	0,16 s	0,25 s	0,125 s	0,2 s
	Premolar	0,32 s	0,5 s	0,2 s	0,32 s	0,16 s	0,25 s
	Molar	0,4 s	0,63 s	0,25 s	0,4 s	0,2 s	0,32 s
Mandibular	Incisor	0,2 s	0,32 s	0,125 s	0,2 s	0,1 s	0,16 s
	Premolar	0,25 s	0,4 s	0,16 s	0,2 s	0,125 s	0,2 s
	Molar	0,25 s	0,4 s	0,16 s	0,25 s	0,125 s	0,2 s
Bitewing	Anterior	0,2 s	0,32 s	0,125 s	0,2 s	0,1 s	0,16 s
	Posterior	0,25 s	0,4 s	0,16 s	0,25 s	0,125 s	0,2 s
Occlusal	Maxillary	0,5 s	0,63 s	0,32 s	0,4 s	0,125 s	0,32 s
	Mandibular	0,5 s	0,63 s	0,32 s	0,4 s	0,25 s	0,32 s

12 inches – 30 cm SSD	FILM D		FILM E		FILM F	
65 kV – 7mA	Child	Adult	Child	Adult	Child	Adult

Maxillary	Incisor	0,32 s	0,5 s	0,2 s	0,32 s	0,16 s	0,25 s
	Premolar	0,4 s	0,63 s	0,25 s	0,4 s	0,2 s	0,32 s
	Molar	0,5 s	0,63 s	0,32 s	0,5 s	0,25 s	0,32 s
Mandibular	Incisor	0,2 s	0,32 s	0,125 s	0,2 s	0,1 s	0,16 s
	Premolar	0,25 s	0,4 s	0,16 s	0,25 s	0,125 s	0,2 s
	Molar	0,32 s	0,5 s	0,2 s	0,32 s	0,16 s	0,25 s
Bitewing	Anterior	0,25 s	0,4 s	0,16 s	0,25 s	0,125 s	0,2 s
	Posterior	0,32 s	0,5 s	0,2 s	0,32 s	0,16 s	0,25 s
Occlusal	Maxillary	0,5 s	0,8 s	0,32 s	0,5 s	0,25 s	0,4 s
	Mandibular	0,5 s	0,8 s	0,32 s	0,5 s	0,25 s	0,4 s

12 inches – 30 cm SSD		FILM D		FILM E		FILM F	
60 kV – 7 mA		Child	Adult	Child	Adult	Child	Adult
Maxillary	Incisor	0,4 s	0,63 s	0,25 s	0,4 s	0,2 s	0,32 s
	Premolar	0,5 s	0,8 s	0,32 s	0,5 s	0,25 s	0,4 s
	Molar	0,63 s	1 s	0,4 s	0,63 s	0,32 s	0,5 s
Mandibular	Incisor	0,32 s	0,5 s	0,2 s	0,32 s	0,16 s	0,25 s
	Premolar	0,4 s	0,63 s	0,25 s	0,4 s	0,2 s	0,32 s
	Molar	0,4 s	0,63 s	0,25 s	0,4 s	0,2 s	0,32 s
Bitewing	Anterior	0,4 s	0,5 s	0,25 s	0,32 s	0,16 s	0,25 s
	Posterior	0,4 s	0,63 s	0,25 s	0,4 s	0,2 s	0,32 s
Occlusal	Maxillary	0,8 s	1 s	0,5 s	0,63 s	0,4 s	0,5 s
	Mandibular	0,8 s	1 s	0,5 s	0,63 s	0,4 s	0,5 s

12 inches – 30 cm SSD		SOPIX2 Inside		Digital X-ray Sensor (CMOS or CCD)		Phosphor plates (PSP)	
70 kV – 6mA		Child	Adult	Child	Adult	Child	Adult
Maxillary	Incisor	0,08 s	0,1 s	0,08 s	0,1 s	0,16 s	0,2 s
	Premolar	0,1 s	0,125 s	0,1 s	0,125 s	0,2 s	0,25 s
	Molar	0,125 s	0,16 s	0,125 s	0,16 s	0,25 s	0,32 s
Mandibular	Incisor	0,063 s	0,08 s	0,063 s	0,08 s	0,125 s	0,16 s
	Premolar	0,08 s	0,1 s	0,08 s	0,1 s	0,16 s	0,2 s
	Molar	0,1 s	0,125 s	0,1 s	0,125 s	0,2 s	0,25 s
Bitewing	Anterior	0,08 s	0,1 s	0,08 s	0,1 s	0,16 s	0,2 s
	Posterior	0,1 s	0,125 s	0,1 s	0,125 s	0,2 s	0,25 s
Occlusal	Maxillary	0,16 s	0,2 s	0,16 s	0,2 s	0,32 s	0,4 s
	Mandibular	0,16 s	0,2 s	0,16 s	0,2 s	0,32 s	0,4 s

7

CUSTOMIZE DEFAULT EXPOSUR VALUES

PLEASE NOTE

The value and steps of the 21 programmed exposure times of the X-MIND unity (refer to chapter 3) cannot be modified in the X-MIND unity x-ray system, since their values are in conformity according to the regulation in force concerning x-ray intra-oral equipment. however the operator does have the abilityto customize the default exposure values.

WARNING

The customizing of the exposure values is just applied to film or sensor type which is currently selected.
After customizing, the "Charts of default exposure values" (refer to Chapter 5) for that specific film or sensor type are NOT valid anymore; however, for all the other film or sensor types for which no customizing has been applied, the default exposure values in the charts are still valid.

To programm the new exposure values of the film or sensor type that iscurrently selected, press either of the following keys:

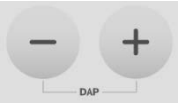

Thebelow symbols being illuminated shown on the display represent the possibility to modify the exp. values scale:

PLEASE NOTE

When either the 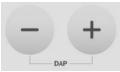 *keys are pressed and held in the "repeat" function will cause the displayed time to scroll faster.*

For confirming the new program check the led status of the key

led BLINKING MEMO **indicates that it is possible to save the new default exposure value. Press the button to save the new default exposure value.**

The MEMO OFF led **indicates that is not possible to save the new default exposure value.**

PLEASE NOTE

It is not possible to save data when the "range of exposure field" exceeds the programmed exposure time limits.

7.1. RESTORING FACTORY VALUES

1. Press and hold the kV key for 5 seconds untill the “SET” message is shown on the display.
2. After a few seconds the name of the first parameter is shown in the bottom of the display
3. Use the key to scroll through the parameters.
4. When the “TIME RESTORE parameter is displayed press the key to enter that parameter
5. The icons start blinking.
6. Use the keys to select «yes» or «no»
7. To restore the unit to the factory default settings select “YES” and press the key to confirm and save the selection.
8. Press the kV key to exit from the menu.

8

X-RAY CALIBRATION PROCEDURE

⚠ **CAUTION**

Perform this operation only if necessary or suggested by the Technical Support Service
During this operation x-rays will be emitted!
It is mandatory to adopt all the safety measures relevant to radioprotection.

1. To perform an X-ray tube calibration procedure please see the instructions below: Press and hold mA key for 5 seconds until the message "TUBE CALIBRATION" appears on the display
2. Keeping a safe distance away from the x-ray beam press and hold in. the exposure key .

   The "CAL. IN PROGRESS" message will appears on the display. Exp. Led is illuminated and an intermittent acoustic sound is emitted.
3. At the end of the procedure, the acoustic sound stops and the "CAL. SUCCESS" message appears on the display.
4. When the pause light goes out the control unit will resume back to standard functioning mode and is ready for a new exam

✍ **PLEASE NOTE**

The calibration procedure takes about 50s

After this procedure, the PAUSE led will start blinking. During this period all the functions of the equipment are inhibited. Please wait until the X-MIND unity completes the cooling time due to the tube calibration before resuming normal operation.

9

ERROR MESSAGES

In the case of malfunction or an event error, the display will indicate an error code together with acoustic signals (5 beeps). Furthermore an error symbol is shown on the display, warning the operator about the error status.

All functions are inhibited until the error status is fixed or restored.

Some errors can be cleared by pressing the reset button on the keypad.

Le graphique suivant comprend une liste de message d'erreur pouvant apparaître lors du fonctionnement du système radiographique X-MIND unity.

The following chart gives a list of error messages that will appear should the X-MIND unity experience a malfunction.

The error codes have the following format:

- The letter "E" followed by a number that identifies the faulty unit (timer or tubehead)
- "1": Fault is located in the timer (control unit)
- "2": Fault is located in the tubehead

This chart lists the causes of the error messages and what to do to solve them:

Code	Message	Description	Resettable
E101	memory fail	EEPROM fault	NO
E102	memory fail	I2C bus EEPROM fault	NO
E103	memory fail	EEPROM DMA readings fault	NO
E104	memory fail	EEPROM DMA writings fault	NO
E105	no response from generator	Lost communication between inverter and generator	NO
E106	wrong response from generator	NAK response from inverter	YES
E107	emission start fail		YES
E108	emission too long		YES
E109	button released beforehand		YES
E110	wrong use of button	Exposure button pressed when “ready” mode not active.	YES
E111	keyboard pressed at boot	Keyboard pressed during boot time	NO
E112	button pushed at boot	Exposure button pressed beforehand	NO
E113	wrong use of keyboard	Keys pressed during an exposure	YES
E114	button release timeout	Exposure button released beforehand after an exposure	YES
E115	wrong parameters in generator	Exposure parameters (kV, mA, exposure time, mode) does not match with the ones set in the control box	YES
E116	generator reset during emission	inverter has been resetted during an exposure	YES
E117	calibration start fail	Calibration	YES
E118	calibration too long	Calibration time too long	YES
E119	button pushed during cooling	Exposure button pressed beforehand pushed during a functionality exposure	YES
E120	cooling time disabled	Functionality pause disabled	YES
E121	button pushed during stand-by	Exposure button pressed beforehand during stand-by	YES
E122	memory fail	Parameters out of range	NO
E123	power relay fail	power relay failure (relay OFF)	NO
E124	power relay fail	power relay failure (relay ON)	NO
E125	power board fail	power board failure	NO
E126	power board fail	power board failure	NO
E127	power board fail	power board failure	NO
E128	power board fail	power board failure	NO
E129	wireless unit not connected	wireless receiver board not connected	YES
E132	system error	hardware error	NO

E201	generator memory	Inverter EEPROM error	NO
E202	generator memory	Inverter I2C EEPROM error	NO

Code	Message	Description	Peut être réinitialisé
E203	generator memory	Inverter EEPROM DMA readings fault	NO
E204	generator memory	Inverter EEPROM DMA writings fault	NO
E205	generator not calibrated	Calibration not yet done	YES
E206	tube voltage too low	Anodic voltage too low	YES
E207	tube voltage too high	Anodic voltage too high	YES
E208	electrical discharge on hv		YES
E209	tube current too low	Anodic current too low	YES
E210	tube current too high	Anodic current too high	YES
E211	filament voltage too low	Filament voltage too low	YES
E212	filament voltage too high	Filament voltage too high	YES
E213	tube unit not connected	High voltage unit not connected	NO
E214	button released beforehand	Enable signal released beforehand during an exposure	YES
E215	generator internal power supply	12V internal voltage too low	NO
E216	generator internal power supply	12V internal voltage too high	NO
E217	generator mode	Wrong exposure enabling signal activation	YES
E218	safe circuit fail	Security interlock fault	NO
E219	tube current too low	Mean anodic current too low	YES
E220	tube current too high	Mean anodic current too high	YES
E221	no tube voltage feedback	Missing HV feedback	NO
E222	ACE acquisition fail	X-rays not detected by Sopix	YES
E223	tube unit temperature too high	Monoblock over temperature	YES
E224	tube unit temperature too low	Monoblock under temperature	YES
E225	tube unit temp. sensor fail	Monoblock temperature sensor fault (open circuit)	YES
E226	tube unit temp. sensor fail	Monoblock temperature sensor fault (short circuit)	YES
E227	voltage reference fail	generator voltage reference too low	YES
E228	voltage reference fail	generator voltage reference too high	YES
E232	system error	hardware error	NO
For the errors that can't be cleared by the reset button on the keypad, please contact your installer or your local Acteon customer service			

10

SUGGESTED MAINTENANCE AND REPAIR

10.1. MAINTENANCE AND CLEANING

Clean the external surface using a damp cloth and non-corrosive non oil-based detergent and disinfect it using a non-aggressive medical detergent. Do not spray detergent or disinfectant directly on the device. The spacer cone may be cleaned with cotton wool soaked with surgical alcohol.

⚠ **CAUTION**

- *Turn off and disconnect the device from the supply mains before carrying out cleaning operations.*
- *Do not spray products directly on the device. Apply the product on a clean cloth.*
- *Always use disposable protective covers for the applied parts.*
- *Do not use UV systems to disinfect the equipment, as exposed parts of the device can turn yellow or discolour.*
- *To avoid any potential hazard or danger to operators and patients, contact your authorized Acteon Technical Representative immediately if you experience any unusual operation, mechanical issues, or equipment malfunction*

⚠ **CAUTION**

- *To ensure both the patient's and operator's safety as well as preserving a high image quality, the device must always be well maintained as described in the accompanying documents. For other maintenance operations, refer to the installation and maintenance manual and to the maintenance guide supplied.*
- *The RESPONSIBLE ORGANIZATION of the device is responsible for scheduling and having preventive maintenance carried out at least every 12 (twelve) months, which consists of maintenance carried out by qualified, authorized authorized professional technicians. It is the RESPONSIBLE ORGANIZATIONS's responsibility to arrange for this service and to assure that the personnel performing this function are fully qualified to service X-MIND unity x-ray equipment.*
- *The RESPONSIBLE ORGANIZATION must always carry out routine maintenance on a daily basis to ensure optimal device performance. These checks must be performed to complete the installation of the X-MIND unity X-Ray System and as part of the recommended maintenance as indicated in the accompanying documents. Failure to perform these checks may result in an installation that does not comply with U.S. Radiation Performance Standards 21 CFR Subchapter J.*
- *The manufacturer shall not be held liable for damage or injuries caused by failure to carry out inspections and tests and by incomplete maintenance.*
- *Repairs and replacements of any component must be carried out solely by authorized and highly qualified personnel and only using genuine spare parts supplied by de Götzen® S.r.l. - ACTEON Group.*
- *Do not operate the unit if there is the threat of an earthquake. Following an earthquake, ensure that the unit is operating properly and it's mandatory to thoroughly check all functions and safety aspects before resuming use.*

⚠ **CAUTION**

For Italy: Medical electrical equipment malfunctions resulting from incomplete or inadequate maintenance can cause serious adverse events.[5]
For Italy refer to Presidential Decree 14/01/1997, Legislative Decree No. 81/2008 (as subsequently amended and modified).

5 Recommendation No.9, April 2009 - Recommendation for the prevention of adverse events resulting from medical electrical equipment malfunctions - Italian Ministry of Labour, Health and Welfare

⚠ **CAUTION - ⚠ WARNING**

It is strictly prohibited to attempt repairs to any electronic or mechanical parts by yourself.
Failure to observe this warning can irreversibly compromise the overall safety of the system and can be dangerous for operators, patients and the environment.

10.2. DISPOSAL

The WEEE symbol indicates that, at the end of its lifespan, the product must be disposed of separately from other waste, in compliance with Directive 2012/19/EC.
Refer to the implementation standards in your country. EU Council Directive 2012/19/EC (WEEE) defines a common approach intended to avoid, prevent or reduce harmful effects due to the exposure to environmental noise and to the disposal of electric and electronic equipment. This product is marked with the symbol shown above. This product must not be disposed of together with domestic waste. It must be taken to a special waste collection centre to be recovered and recycled. The crossed-out wheelie bin identifies a product placed on the market after the 13th of August 2005 (see IEC EN 50419:2005). This product is subjected to Council Directive 2012/19/EC (WEEE) and national implementation standards. Refer to your supplier for the disposal of this product.

Proper disposal of this product will help protect the environment.

For further details on the disposal of this product, please contact local authorities, the provider of the domestic waste disposal service or the outlet where you have purchased it. For details on the disposal of disposable protections, films and sensor refer to the related instruction for use or manuals of their respective manufacturers.

⚠ **CAUTION**

To prevent any risk of environmental contamination, do not dispose this product together with domestic waste.

11

SSD - SOURCE TO SKIN DISTANCE and FOCAL SPOT POSITION

The position of the focal spot, together with the target angle and the reference axes are shown in the figure below:

LONG CONE (cylindrical and rectangular)

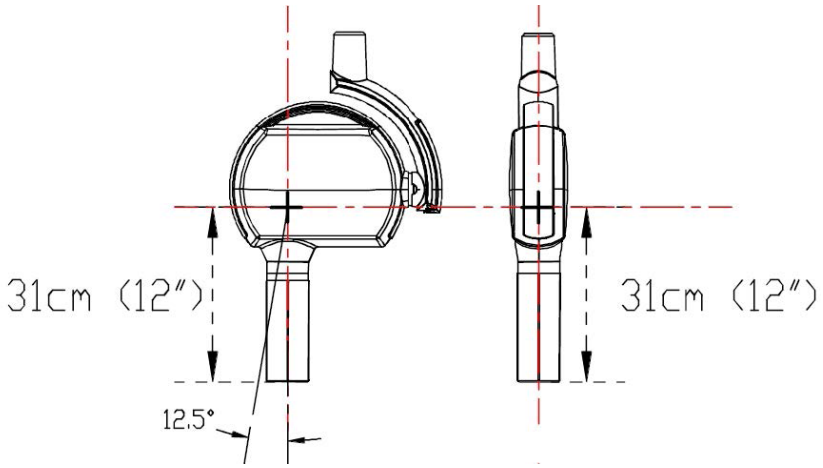

SHORT CONE (cylindrical and rectangular)

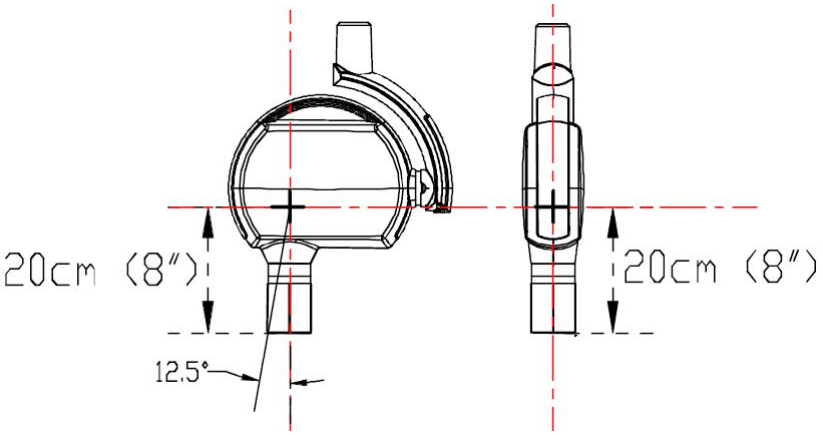

The tolerances of the focal spot on the reference axes are ± 0.5mm

Dimensions of the area of the x-ray beam output according to the shape of the beam limiting device:

Cylindrical Beam Limiting device	**Ø≤60 mm**
Rectangular Beam Limiting device	**44x35 mm**

Annex A: Technical data

A.1 TECHNICAL SPECIFICATIONS

X-RAY SOURCE ASSEMBLY

HVL	>1,5 mmAl / 70 kV
Total filtration	2,2 mmAl / 70 kV
Inherent Filtration	1,2 mmAl équivalent / 70 kV
Leakage radiation (measured 70kV/6mA/2s)	<0,25 mGy/h@1000 mm
X-ray tube voltage accuracy	±10%
X-ray tube current accuracy	±20%
Radiation linearity	<20%
X-ray emission time accuracy	±(10%+1 ms)
Current-time product accuracy	±(10%+0.2 mAs)
X-Ray Tube Current	4-7 mA (crans +/- 1mA)
Maximum X-Ray Tube Current	7 mA
X-Ray Tube Voltage	60 kV/65 kV/70 kV
Maximum X-Ray Tube Voltage	70 kVp
Exposure times	0,02-2 s (21 étapes, R'10)
Technique factors related to the maximum specified energy input in one hour	65 kVp,7 mA
Nominal X-ray Tube Voltage together with the highest X-ray Tube Current obtainable from the High-Voltage Generator when operated at that X-ray Tube Voltage	65 kVp,7 mA
Highest X-ray Tube Current together with the highest X-ray Tube Voltage obtainable from the High-Voltage Generator when operating at that X-ray Tube Current	7 mA, 65 kVp
The Combination of X-ray Tube Voltage and X-ray Tube Current which results in the highest electric output power	65 kVp,7 mA
The lowest Current Time Product or the combinations of Loading Factors resulting in the lowest Current Time Product	0,08 mAs (0,02 s @ 4mA)
X-ray emission technology/ mode of operation	Haute Fréquence, courant continu
Maximum Combinations of Loading Factors	70 kV/6 mA/2 s 65 kV/7 mA/2 s 60 kV ou 65 kV=7 mA max./2 s max. 70 kV=6 mA max./2 s max.
Dose reproducibility (COV[6])	<0,05
X-Ray Tube Voltage Reproducibility (COV)	<0,05
Loading factors for Leakage radiation measurement	70 kV/6 mA/2 s
Cooling down duty cycle	1:30

PLEASE NOTE

The measurements criteria are based on the requirements stated by the applicable standards listed in the annex A of this manual.

6 Coefficient of Variation

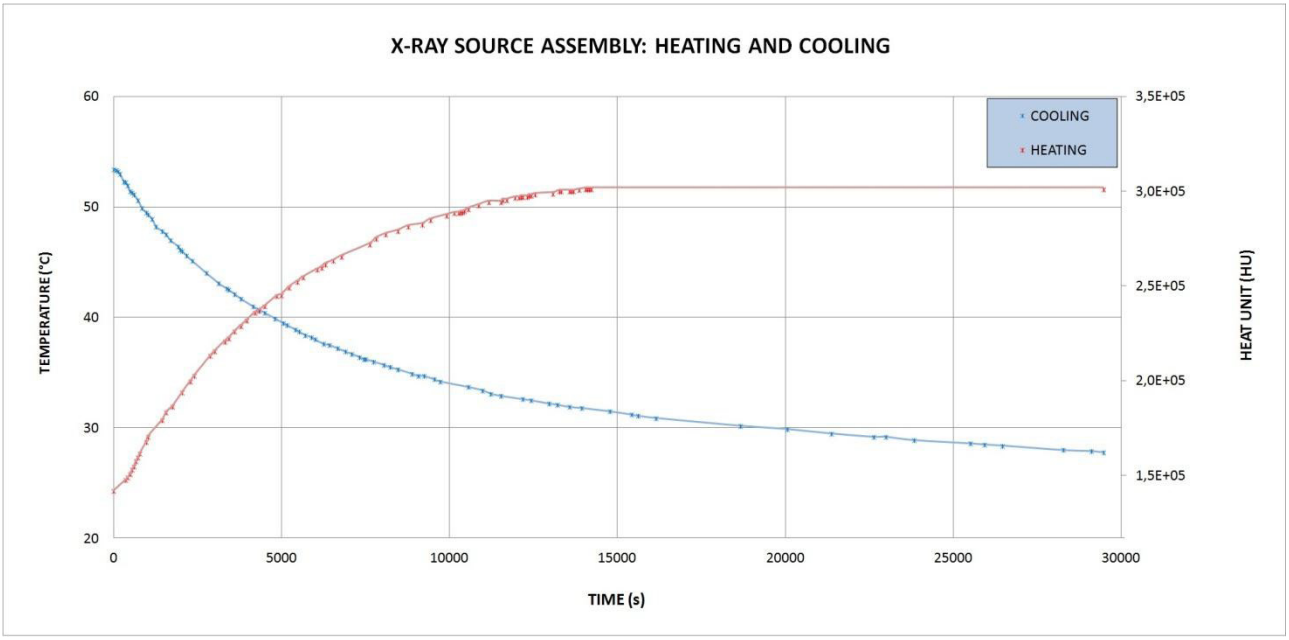

Heating and cooling curve of the X-Mind unity X-Ray source Assembly (X-Ray Tube Housing)

X-RAY TUBE

X-ray tube model	TOSHIBA D-041
Focal Spot Size (IEC 336)	0,4 mm
Anode Angle	12,5°
Anode material	Tungsten

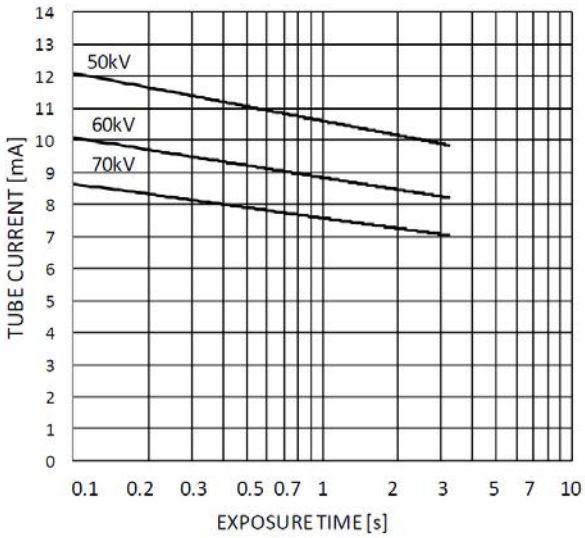

Maximum Rating Charts of the Toshiba D-041

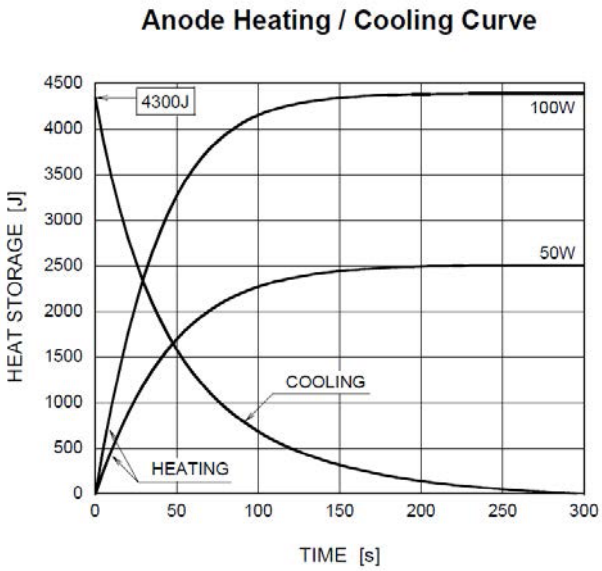

Heating/Cooling Curves of the Toshiba D-041 anode

FIRMWARE

RXCD board	2,20
RXHVC board	2,14

PLEASE NOTE

Firmware versions maybe periodically updated therefore the versions indicated in the chart above may be different from the versions installed on the unit.
To know the firmware versions installed in your X-MIND unity please follow the instructions in the following chapter "ADVANCED SETTINGS" of the "X-MIND unity Installation and Maintenance manual".

DEVICE POWER SUPPLY and ELECTRICAL CLASSIFICATION

Supply voltage	100 V à 240 V
Supply voltage frequency	50/60 Hz
Maximum Line Current (technique factors that constitute maximum line current condition: 65kV, 7mA, 2s)	8,5 A (@100 V)
Standby current	100 mA
Maximum Adsorbed Power	850 VA
Maximum Rated Power	900 W
Adsorbed Power (Stand-by mode, not armed)	3 VA
Adsorbed Power (Armed mode – 240Vac/60Hz)	26 VA
Rated Power @ 0.1s	900 W à 70 kV/6 mA
Fuse (only Line)	T10 AH 250 V
Apparent Resistance	0.2 Ω

ELECTRICAL CLASSIFICATION (IEC 60601-1)

According to the general safety regulations of IEC 60601-1 2nd and 3rd editions concerning the safety of electro-medical equipment, this system is classified as:

Protection against electrical shock (insulation class)	Class I
Degree of protection against electrical shock (applied part)	TYPE B
Use with flammable anaesthetics	Not evaluated for use in presence of flammable anaesthetic mixture with air, oxygen or nitrous oxide
Sterilization and disinfection methods	The device is supplied not sterile and it must not be subjected to sterilization
Operation mode	Continuous operation with intermittent X-ray loading
NFPA 70 Classification	Momentary Operation (<5s)

⚠ WARNING

NEVER CONNECT the X-Mind Unity to the mains without first checking the voltage setting as indicated on the labels. Incorrect voltage settings will cause irreversible damage to the X-Mind unity electronics.

DEGREE OF PROTECTION PROVIDED BY ENCLOSURES

According to the standard EN 60529, the degree of protection is:

IP20

MECHANICAL DATA

Dimensions	Refer to the dedicated annex relevant to the dimensions
Total Weights	24kg / (52.9 lbs) (with horizontal bracket length 1100mm) / (43.3”) 23kg / (50.7 lbs) (with horizontal bracket length 800mm) / (31.4”) 22kg / (48.5 lbs) (with horizontal bracket length 400mm) / (15.7”)
Weight of the Tubehead Assembly	5.5 kg / (12.1 lbs)
Mechanical configuration	Wall mounting. Top and Bottom mounting.

A.2 INTENDED ENVIRONMENT

⚠ **CAUTION - ⚠ WARNING**

- *X-Mind Unity is for INDOOR USE ONLY*
- *If the X-Mind Unity has been stored at a temperature below + 10˚C/ + (50˚ F) for more than a few hours, enough time must be allowed for the device to reach the room temperature before reconnecting it to the mains voltage and applying power .*

CLINICAL ENVIRONMENT CONDITIONS (OPERATING CONDITIONS)

Temperature: 10 °C (50°F) ÷ 40 °C (104°F);
Relative humidity: 25 ÷ 75 %;
Atmospheric pressure: 850 ÷ 1060 hPa.

TRANSPORTATION ENVIRONMENT CONDITIONS

Temperature: 0 °C (32°F) ÷ 50 °C (122°F);
Relative humidity: see clinical environment conditions
Atmospheric pressure: 500 ÷ 1060 hPa

WAREHOUSING ENVIRONMENT CONDITIONS

See Transportation environment conditions

A.3 DIMENSIONS OF THE UNIT

FRONT VIEW (REST POSITION) - BOTTOM MOUNT

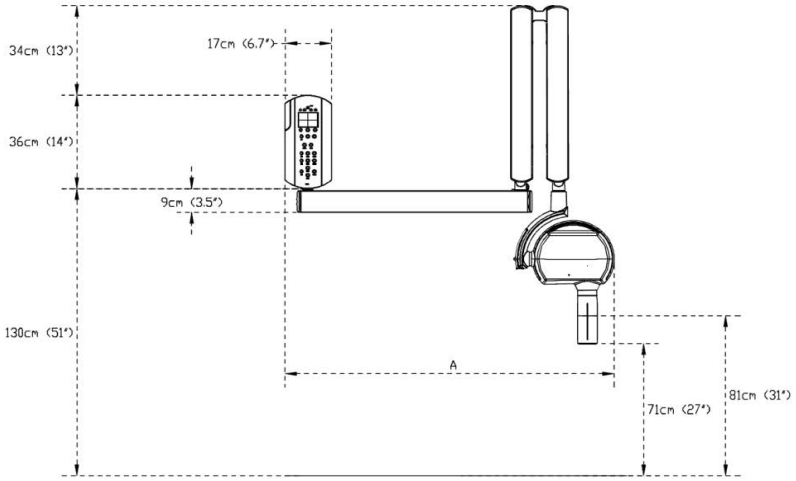

A	
40cm (16") bracket	79cm (31")
80cm (31") bracket	119cm (46")
110cm (43") bracket	149cm (59")

FRONT VIEW (REST POSITION) - TOP MOUNT

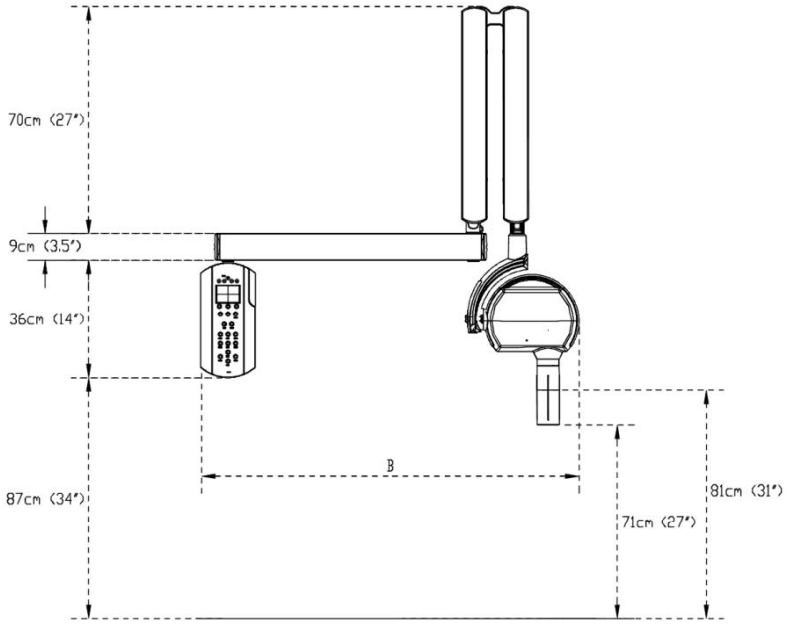

B	
40cm (16") bracket	79cm (31")
80cm (31") bracket	119cm (46")
110cm (43") bracket	149cm (59")

SIDE VIEW (OPEN) - TOP MOUNT

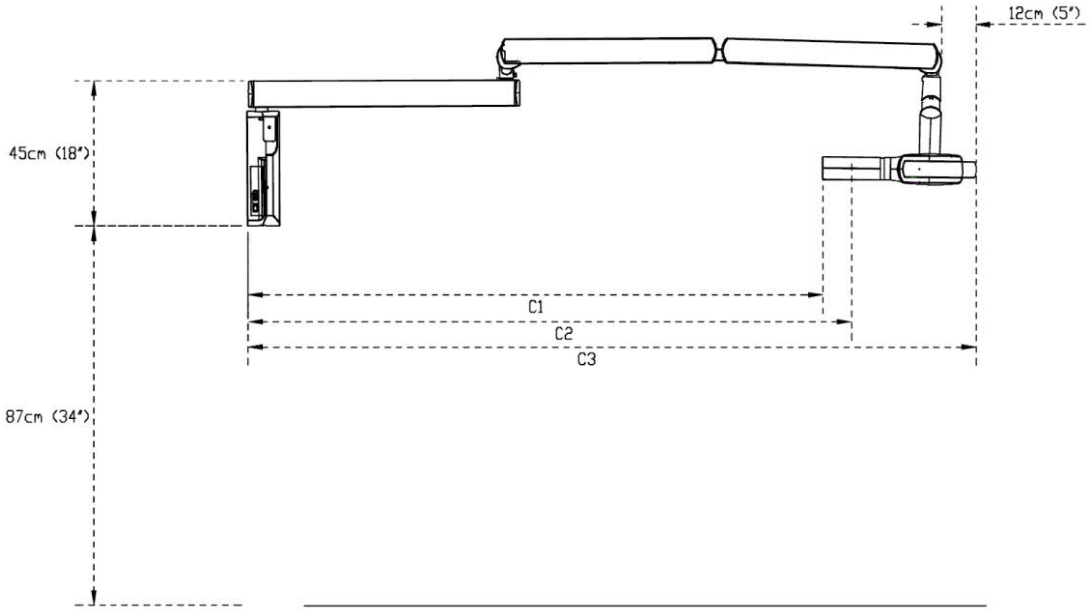

C1 - LONG CONE	
40cm (16") bracket	140cm (55")
80cm (31") bracket	180cm (71")
110cm (43") bracket	210cm (83")
C2 - SHORT CONE	
40cm (16") bracket	150cm (59")
80cm (31") bracket	190cm (75")
110cm (43") bracket	220cm (87")
C3 - FULL SIZE	
40cm (16") bracket	188cm (74")
80cm (31") bracket	228cm (90")
110cm (43") bracket	258cm (102")

SIDE VIEW (CLOSED) - TOP MOUNT

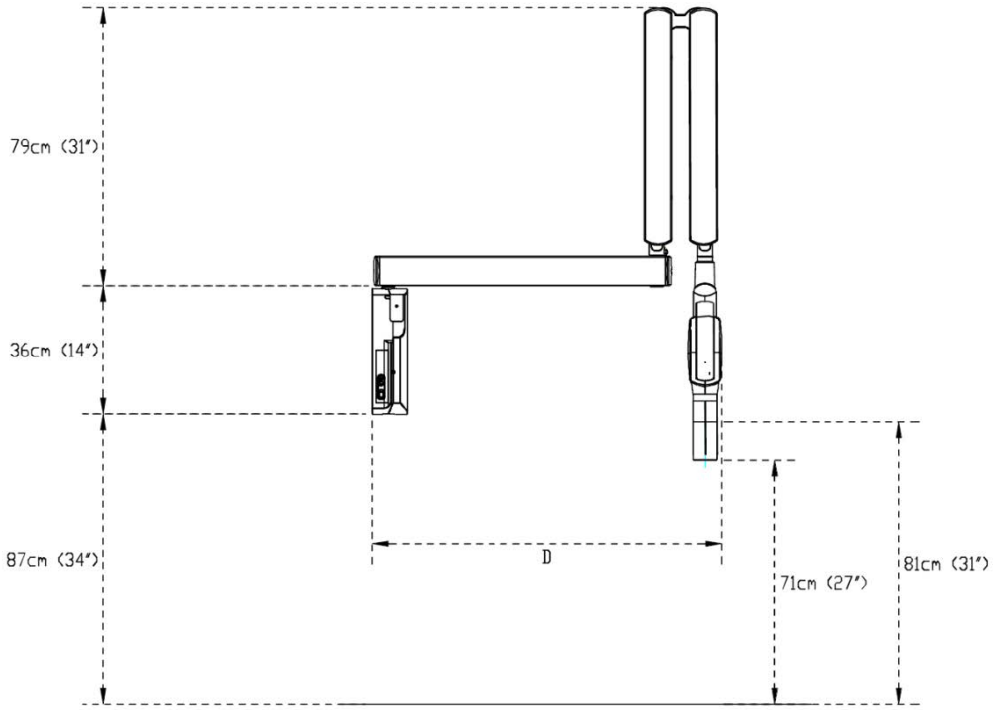

D	
40cm (16") bracket	60cm (24")
80cm (31") bracket	100cm (39")
110cm (43") bracket	130 (51")

SIDE VIEW (OPEN) - BOTTOM MOUNT

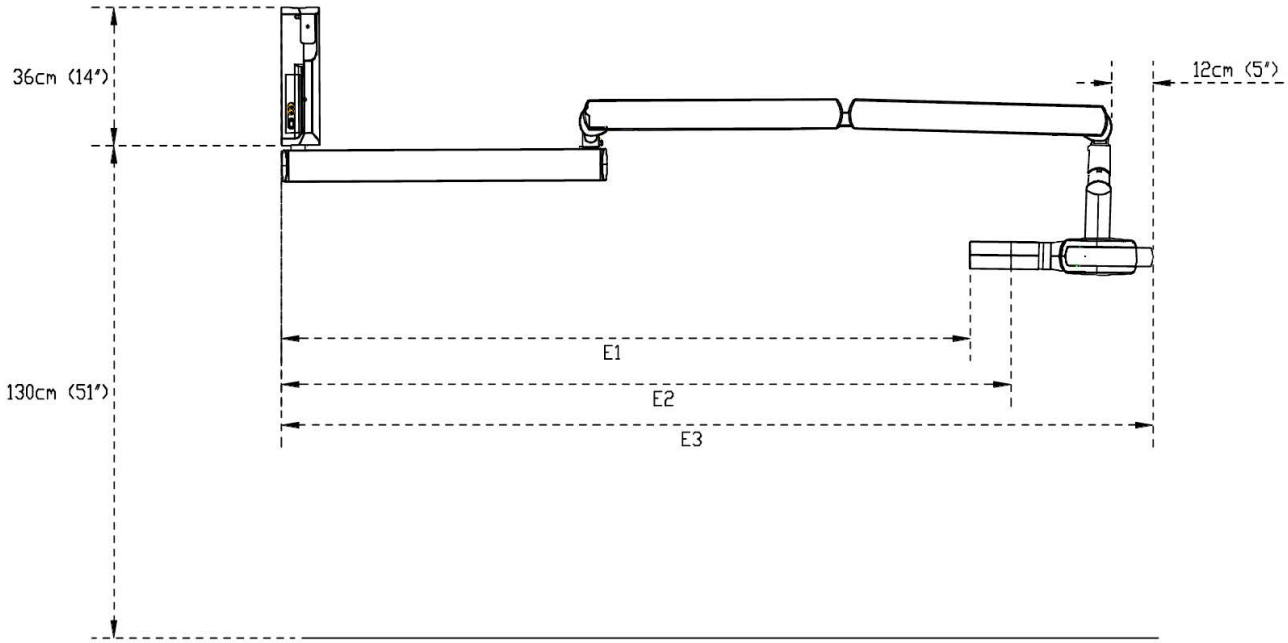

E1 - LONG CONE	
40cm (16″) bracket	140cm (55″)
80cm (31″) bracket	180cm (71″)
110cm (43″) bracket	210cm (83″)
E2 - SHORT CONE	
40cm (16″) bracket	150cm (59″)
80cm (31″) bracket	190cm (75″)
110cm (43″) bracket	220cm (87″)
E3 - FULL SIZE	
40cm (16″) bracket	188cm (74″)
80cm (31″) bracket	228cm (90″)
110cm (43″) bracket	258cm (102″)

SIDE VIEW (CLOSED) - BOTTOM MOUNT

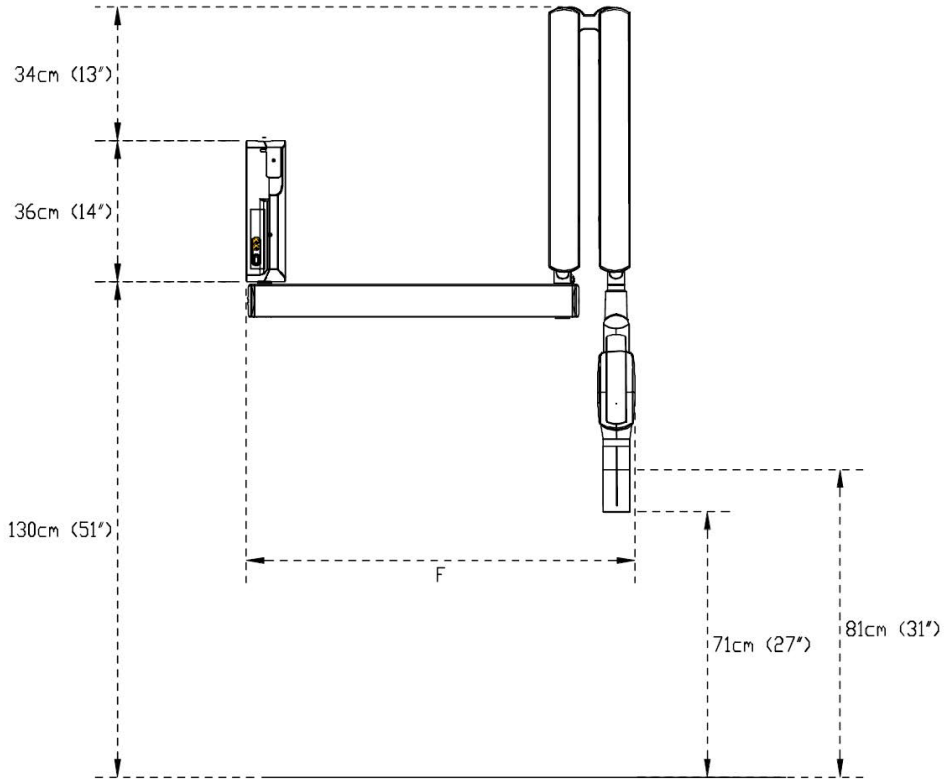

F	
40cm (16″) bracket	60cm (24″)
80cm (31″) bracket	100cm (39″)
110cm (43″) bracket	130 (51″)

FRONT VIEW (REST POSITION) - MOBILE

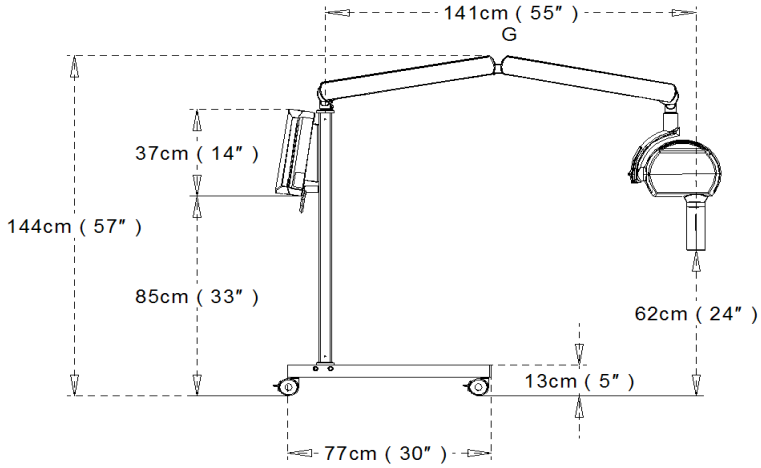

G	
no bracket	141cm (55″)

A.4 LIST OF INTERNATIONAL STANDARDS AND DIRECTIVES

The X-MIND unity: x-ray equipment for dental intraoral radiography, is in compliance with the following:

- MDD 93/42 EEC and subsequent amendments

In compliance with the classification indicated in the Medical Device Directive 93/42/EEC, Annex IX, article 10: “Active devices intended to emit ionizing radiation and intended for diagnostic radiology”, the system is classified as:

Class IIb

- DHHS Radiation performance standards 21 CFR Subchapter J
- IEC 60601-1:1988, 2nd edition
- IEC 60601-1/A1
- IEC 60601-1/A2
- CSA C22.2#601.1-M90 and S1+A2
- UL 60601-1: 2003
- AS/NZS 3200.1.0
- IEC 60601-1-3:1994, 1st edition
- IEC 60601-1-4:1996, 1st edition
- IEC 60601-1-4/A1
- IEC 60601-2-7:1998, 2nd edition
- IEC 60601-2-28:1993, 1st edition
- IEC 60601-2-32:1994, 1st edition
- IEC 60601-1:2005, 3rd edition
- IEC 60601-1-3:2008,
- IEC 60601-1-6:2010.
- IEC 60601-2-65:2012
- ANSI/AAMI ES60601-1:2005
- CAN/CSA-C222.2 N. 60601-1:08
- IEC 60601-1-2:2007, 3rd edition

Certifications

CE

ETL

A.5 DOSIMETRIC INDICATIONS

The radiation exposure is reported in terms of Dose Area Product (DAP), which takes into account the entire area of the x-ray beam and the total amount of x-ray radiation incident on the patient. The DAP is obtained by multiplying the Air Kerma by the corresponding x-ray beam area, which is dependent by the typology of beam limiting device installed. It is independent by the measured location, because increases in beam area are compensated by the reduction of beam intensity (inverse square law).

The dosimetric values reported here are relevant to the following measured values of Total Filtration and Half Value Layer:

kV	HVL (mm Al)	Total Filtration (mm Al)
60	2	2,3
65	2,1	2,3
70	2,3	2,3

In the following tables the radiation exposure is indicated in terms of DAP [mGy cm2] for each setting of kV, beam limiting device length (SSD) and Beam Limiting Device type (circular or rectangular). These values are displayed by the X-MIND unity when the corresponding loading factors are selected. If the ACE technology intervenes and stops the X-ray emission, the effective value of DAP is calculated and displayed after the exposition.
As per paragraph 203.6.4.6 of the IEC 60601-2-65, the overall deviation from the estimated air kerma is within 50%.

BLD SHAPE	Circular										
SSD [mm]	200										
kV	60				65				70		
mA	7	6	5	4	7	6	5	4	6	5	4
Time [s]/DAP [mGy cm²]											
0,02	3,8	3,3	2,7	2,2	4,4	3,8	3,1	2,5	4,3	3,6	2,9
0,025	4,7	4	3,4	2,7	5,5	4,7	3,9	3,1	5,4	4,5	3,6
0,032	6,1	5,2	4,4	3,5	7	6	5	4	6,9	5,8	4,6
0,04	7,6	6,5	5,4	4,3	8,8	7,5	6,3	5	8,6	7,2	5,7
0,05	9,5	8,1	6,8	5,4	11	9,4	7,9	6,3	10,8	9	7,2
0,063	11,9	10,2	8,5	6,8	13,9	11,9	9,9	7,9	13,6	11,3	9,1
0,08	15,1	12,9	10,8	8,6	17,6	15,1	12,6	10,1	17,3	14,4	11,5
0,1	18,9	16,2	13,5	10,8	22	18,9	15,7	12,6	2,6	2,2	1,7
0,125	23,7	20,3	16,9	13,5	27,5	23,6	19,6	15,7	27	22,5	18
0,16	30,3	26	21,6	17,3	35,2	30,2	25,1	20,1	34,6	28,8	23,1
0,2	37,8	32,4	27	21,6	44,1	37,8	31,5	25,2	43,2	36	28,8
0,25	47,3	40,5	33,8	27	55,1	47,2	39,4	31,5	54	45	36
0,32	60,6	51,9	43,3	34,6	70,5	60,4	50,4	40,3	69,2	57,7	46,1
0,4	75,7	64,9	54,1	43,3	88,1	75,5	62,9	50,3	86,5	72,1	57,7
0,5	94,6	81,1	67,6	54,1	110,1	94,4	78,6	62,9	108,1	90,1	72,1
0,63	119,2	102,2	85,1	68,1	138,8	119	99,1	79,3	136,2	113,5	90,8

0,8	151,4	129,8	108,1	86,5	176,2	151	125,9	100,7	172,9	144,1	115,3
1	189,2	162,2	135,1	108,1	220,3	188,8	157,4	125,9	216,2	180,2	144,1
1,25	236,5	202,7	168,9	135,1	275,3	236	196,6	157,3	270,2	225,2	180,1
1,6	302,8	259,5	216,3	173	352,4	302,1	251,7	201,4	345,8	288,2	230,5
2	378,5	324,4	270,4	216,3	440,5	377,6	314,6	251,7	432,3	360,3	288,2

BLD SHAPE	Circular										
SSD [mm]	300										
kV	60				65				70		
mA	7	6	5	4	7	6	5	4	6	5	4
Time [s]/DAP [mGy cm²]											
0,02	1,7	1,5	1,2	1	2	1,7	1,4	1,1	2	1,7	1,3
0,025	2,1	1,8	1,5	1,2	2,5	2,1	1,8	1,4	2,4	2	1,6
0,032	2,7	2,3	1,9	1,5	3,2	2,7	2,3	1,8	3,1	2,6	2,1
0,04	3,4	2,9	2,4	1,9	4	3,4	2,9	2,3	3,9	3,3	2,6
0,05	4,3	3,7	3,1	2,5	5	4,3	3,6	2,9	4,9	4,1	3,3
0,063	5,4	4,6	3,9	3,1	6,3	5,4	4,5	3,6	6,2	5,2	4,1
0,08	6,8	5,8	4,9	3,9	8	6,9	5,7	4,6	7,8	6,5	5,2
0,1	8,5	7,3	6,1	4,9	9,9	8,5	7,1	5,7	9,8	8,2	6,5
0,125	10,7	9,2	7,6	6,1	12,4	10,6	8,9	7,1	12,2	10,2	8,1
0,16	13,7	11,7	9,8	7,8	15,9	13,6	11,4	9,1	15,6	13	10,4
0,2	17,1	14,7	12,2	9,8	19,9	17,1	14,2	11,4	19,6	16,3	13,1
0,25	21,4	18,3	15,3	12,2	24,9	21,3	17,8	14,2	24,4	20,3	16,3
0,32	27,3	23,4	19,5	15,6	31,8	27,3	22,7	18,2	31,3	26,1	20,9
0,4	34,2	29,3	24,4	19,5	39,8	34,1	28,4	22,7	39,1	32,6	26,1
0,5	42,7	36,6	30,5	24,4	49,7	42,6	35,5	28,4	48,9	40,8	32,6
0,63	53,8	46,1	38,4	30,7	62,7	53,7	44,8	35,8	61,6	51,3	41,1
0,8	68,3	58,5	48,8	39	79,6	68,2	56,9	45,5	78,2	65,2	52,1
1	85,4	73,2	61	48,8	99,5	85,3	71,1	56,9	97,8	81,5	65,2
1,25	106,8	91,5	76,3	61	124,4	106,6	88,9	71,1	122,2	101,8	81,5
1,6	136,7	117,2	97,6	78,1	159,2	136,5	113,7	91	156,5	130,4	104,3
2	170,8	146,4	122	97,6	199	170,6	142,1	113,7	195,6	163	130,4

BLD SHAPE	Rectangular										
SSD [mm]	200										
kV	60				65				70		
mA	7	6	5	4	7	6	5	4	6	5	4
Time [s]/DAP [mGy cm²]											
0,02	2,1	1,8	1,5	1,2	2,4	2,1	1,7	1,4	2,4	2	1,6
0,025	2,6	2,2	1,9	1,5	3	2,6	2,1	1,7	2,9	2,4	1,9
0,032	3,3	2,8	2,4	1,9	3,8	3,3	2,7	2,2	3,8	3,2	2,5
0,04	4,1	3,5	2,9	2,3	4,8	4,1	3,4	2,7	4,7	3,9	3,1
0,05	5,2	4,5	3,7	3	6	5,1	4,3	3,4	5,9	4,9	3,9
0,063	6,5	5,6	4,6	3,7	7,6	6,5	5,4	4,3	7,4	6,2	4,9
0,08	8,2	7	5,9	4,7	9,6	8,2	6,9	5,5	9,4	7,8	6,3
0,1	10,3	8,8	7,4	5,9	12	10,3	8,6	6,9	11,8	9,8	7,9
0,125	12,9	11,1	9,2	7,4	15	12,9	10,7	8,6	14,7	12,3	9,8
0,16	16,5	14,1	11,8	9,4	19,2	16,5	13,7	11	18,8	15,7	12,5
0,2	20,6	17,7	14,7	11,8	24	20,6	17,1	13,7	23,5	19,6	15,7
0,25	25,8	22,1	18,4	14,7	30	25,7	21,4	17,1	29,4	24,5	19,6
0,32	33	28,3	23,6	18,9	38,4	32,9	27,4	21,9	37,7	31,4	25,1
0,4	41,2	35,3	29,4	23,5	48	41,1	34,3	27,4	47,1	39,3	31,4
0,5	51,5	44,1	36,8	29,4	60	51,4	42,9	34,3	58,9	49,1	39,3
0,63	64,9	55,6	46,4	37,1	75,6	64,8	54	43,2	74,2	61,8	49,5
0,8	82,5	70,7	58,9	47,1	96	82,3	68,6	54,9	94,2	78,5	62,8
1	103,1	88,4	73,6	58,9	120	102,9	85,7	68,6	117,7	98,1	78,5
1,25	128,8	110,4	92	73,6	150	128,6	107,1	85,7	147,2	122,7	98,1
1,6	164,9	141,3	117,8	94,2	192	164,6	137,1	109,7	188,4	157	125,6
2	206,1	176,7	147,2	117,8	239,9	205,6	171,4	137,1	235,5	196,3	157

BLD SHAPE	Rectangular										
SSD [mm]	300										
kV	60				65				70		
mA	7	6	5	4	7	6	5	4	6	5	4
Time [s]/DAP [mGy cm²]											
0,02	0,9	0,8	0,6	0,5	1,1	0,9	0,8	0,6	1,1	0,9	0,7
0,025	1,2	1	0,9	0,7	1,4	1,2	1	0,8	1,3	1,1	0,9
0,032	1,5	1,3	1,1	0,9	1,7	1,5	1,2	1	1,7	1,4	1,1
0,04	1,9	1,6	1,4	1,1	2,2	1,9	1,6	1,3	2,1	1,8	1,4
0,05	2,3	2	1,6	1,3	2,7	2,3	1,9	1,5	2,7	2,3	1,8
0,063	2,9	2,5	2,1	1,7	3,4	2,9	2,4	1,9	3,4	2,8	2,3
0,08	3,7	3,2	2,6	2,1	4,3	3,7	3,1	2,5	4,3	3,6	2,9
0,1	4,7	4	3,4	2,7	5,4	4,6	3,9	3,1	5,3	4,4	3,5
0,125	5,8	5	4,1	3,3	6,8	5,8	4,9	3,9	6,7	5,6	4,5
0,16	7,4	6,3	5,3	4,2	8,7	7,5	6,2	5	8,5	7,1	5,7
0,2	9,3	8	6,6	5,3	10,8	9,3	7,7	6,2	10,7	8,9	7,1
0,25	11,6	9,9	8,3	6,6	13,5	11,6	9,6	7,7	13,3	11,1	8,9
0,32	14,9	12,8	10,6	8,5	17,3	14,8	12,4	9,9	17	14,2	11,3
0,4	18,6	15,9	13,3	10,6	21,7	18,6	15,5	12,4	21,3	17,8	14,2
0,5	23,3	20	16,6	13,3	27,1	23,2	19,4	15,5	26,6	22,2	17,7
0,63	29,3	25,1	20,9	16,7	34,1	29,2	24,4	19,5	33,6	28	22,4
0,8	37,2	31,9	26,6	21,3	43,3	37,1	30,9	24,7	42,6	35,5	28,4
1	46,5	39,9	33,2	26,6	54,2	46,5	38,7	31	53,3	44,4	35,5
1,25	58,2	49,9	41,6	33,3	67,7	58	48,4	38,7	66,6	55,5	44,4
1,6	74,4	63,8	53,1	42,5	86,7	74,3	61,9	49,5	85,2	71	56,8
2	93,1	79,8	66,5	53,2	108,4	92,9	77,4	61,9	106,5	88,8	71

A.6 EMC COMPATIBILITY

Electromagnetic compatibility (EMC) is assessed with reference to the following standards:

IEC 60601-1-2:2007, 3rd edition

EMISSION

- EN 55011:2008+A2
- EN 61000-3-2:2006 +A1 +A2
- EN 61000-3-3:2008

IMMUNITY

- EN 61000-4-2:2009
- EN 61000-4-2/A1: 2010
- EN 61000-4-2
- EN 61000-4-3:2006
- EN 61000-4-4:2004
- EN 61000-4-5:2006
- EN 61000-4-5/A1
- EN 61000-4-6:2007
- EN 61000-4-8:2010
- EN 61000-4-11:2004

Guidance and manufacturer's declaration – electromagnetic emissions		
X-MIND unity is intended to be used in the electromagnetic environment specified below. The customer or the operator of X-MIND unity must ensure that the device is used in this type of environment.		
Emission test	Conformity	Electromagnetic environment guidance
RF emissions CISPR 11	Group 1	X-MIND unity uses RF energy only for internal operation. RF emissions are extremely and attenuated are not likely to generate interference with electronic equipment in the vicinity.
RF emissions CISPR 11	Class B	X-MIND unity is suitable for use in all establishments, including domestic establishments and those directly connected to the public low-voltage power supply network that supplies buildings used for domestic purposes.
Harmonic emissions IEC 61000-3-2	Class A	
Voltage fluctuations/flicker emissions IEC 61000-3-3	Complies	

Guidance and manufacturer's declaration – electromagnetic immunity			
X-MIND unity is intended to be used in the electromagnetic environment specified below. The customer or X-MIND unity operator must ensure that the device is used in this type of environment.			
Immunity test	IEC 60601 test level	Compliance level	Electromagnetic environment guidance
Electrostatic discharge (ESD) IEC 61000-4-2	+/- 6 kV contact +/- 8 kV air	+/- 6 kV contact +/- 8 kV air	Floors should be wood, concrete or ceramic tile. If floors are covered with synthetic material, the relative humidity must be at least 30%
Electrical fast transient/burst IEC 61000-4-4	+/- 2 kV for power supply lines +/- 1 kV for input/output lines	+/- 2 kV for power supply lines Not relevant for input/output lines	Mains power quality should conform to that of typical commercial or hospital applications.
Surge IEC 61000-4-5	+/- 1 kV differential mode +/- 2 kV common mode	+/- 1 kV differential mode Not relevant for common mode	Mains power quality should conform to that of typical commercial or hospital applications.
Voltage dips, short interruptions and voltage variations on power supply input lines IEC 61000-4-11	<5 % U_T (>95 % dip in U_T) for 0.5 cycles 40 % U_T (60 % dip in U_T) for 5 cycles 70 % U_T (30 % dip in U_T) for 25 cycles <5 % U_T (>95 % dip in U_T) for 5 seconds	<5 % U_T (>95 % dip in U_T) for 0.5 cycles 40 % U_T (60 % dip in U_T) for 5 cycles 70 % U_T (30 % dip in U_T) for 25 cycles <5 % U_T (>95 % dip in U_T) for 5 seconds	Mains power quality should conform to that of typical commercial or hospital applications. If the X-MIND unity operator requires continued operation even during mains power outage, we recommend powering the system using a UPS.
Mains frequency (50/60 Hz) magnetic field IEC 61000-4-8	3 A/m	3 A/m	Power frequency magnetic fields must be at the typical level of standard mains for commercial or hospital use.
Notes: • Ut is the AC mains voltage prior to the application of the test level.			

Guidance and manufacturer's declaration – electromagnetic immunity			
X-MIND unity is intended to be used in the electromagnetic environment specified below. The customer or X-MIND unity operator must ensure that the device is used in this type of environment.			
Immunity test	IEC 60601 test level	Compliance level	Electromagnetic environment guidance
			Portable and mobile RF communication equipment must be used no any closer to any part of the X-MIND unity, including cables than the recommended separation distance, calculated according to the equation corresponding to the frequency of the transmitter Recommended separation distance
Conducted RF IEC 61000-4-6	3 Vrms 150 kHz à 80 MHz	3 Vrms	d= 1,2 √P
Radiated RF IEC 61000-4-3	10 V/m 80MHz à 2,5GHz	3 V/m	d= 1,2 √P 80 MHz à 800 MHz d= 2,3 √P 800 MHz à 2,5 GHz where P is the maximum output power rating of the transmitter in watts (W) according to the transmitter manufacturer and “d” is the recommended separation distance in metres (m). Field strength from fixed RF transmitters as determined by an electromagnetic site surveya must be below the compliance level corresponding to each frequency range.b Interference can occur in the proximity of equipment marked with the following symbol:
Notes: • At 80 MHz and 800 MHz the higher frequency range applies. • These guidelines may not apply in every situation. Electromagnetic propagation is affected by absorption and reflection from structures, objects and people.			
[a] Field strength from fixed RF transmitters, such as base stations for radio (cellular/wireless) telephones and land mobile radios, amateur radio, AM and FM radio and TV broadcast cannot be predicted with accuracy on a theoretical basis. To assess the electromagnetic environment created by fixed RF transmitters, an electromagnetic site survey should be considered. If the measured field strength in the place where the equipment is used exceeds the corresponding RF compliance level (see above), it is important to ensure regular equipment operation. In the event of abnormal operation, additional measures may be required, such as redirecting or relocating X-MIND unity. [b] Over the frequency range between 150 kHz and 80 MHz, the field strength must be below 10 V/m.			

Recommended separation distances between portable and mobile RF communication equipment and X-MIND unity medical device			
These devices are intended to be used in environments where radiated RF interference is controlled. The customer or X-MIND unity operator can help prevent electromagnetic interference by maintaining a minimum distance between portable and mobile RF communication equipment (transmitters) and X-MIND unity, as indicated below, according to the maximum output power of the communication equipment.			
Rated maximum output power of the transmitter W	Separation distance according to transmitter frequency		
	150 kHz à 80 MHz d= 1,2 √P	80 MHz à 800 MHz d= 1,2 √P	800 MHz à 2,5 GHz d= 2,3 √P
0,01	0,12	0,12	0,24
0,1	0,38	0,38	0,73
1	1,2	1,2	2,3
10	3,8	3,8	7,3
100	12	12	23
In the event of transmitters whose maximum nominal output power coefficient does not fall within the indicated parameters, the recommended separation distance in metres (m) can be determined by means of the equation corresponding to the frequency of the transmitter, where P is the maximum output power coefficient of the transmitter in watts (W) according to the information provided by the manufacturer. Note 1: At 80 MHz and 800 MHz apply the separation distance corresponding to the highest frequency range. Note 2: These guidelines may not apply in every situation. Electromagnetic propagation is affected by absorption and reflection from structures, objects and people.			

CE 2460

de Götzen S.r.l • A company of ACTEON Group
Via Roma 45 • 21057 OLIGATE OLONA (VARESE) • ITALY
Tel +39 0331 376 760 • Fax +39 0331 376 763
E-Mail: imaging.italysupport@acteongroup.com •www.acteongroup.com